HOWARD STEIN HUDSON

Engineers + Planners

205 Revere Beach Parkway

Notice of Intent

Prepared for
205 Revere Beach Parkway Partners, LLC

Prepared by
Howard Stein Hudson

December 2016

Table of Contents

WPA Form 3 – Notice of Intent

Table of Contents i

Attachment A – Project Narrative 1

1.0 Project Overview 1

2.0 Existing Conditions 1

3.0 Proposed Development 2

4.0 Alternatives Analysis 3

4.1 No Build 3

4.2 Grocery Store 4

4.3 Residential 4

4.4 Preferred Alternative 4

5.0 Wetland Resource Area Impacts 4

5.1 Wetland Impacts 4

6.0 Compliance with Performance Standards 5

6.1 Land Subject to Coastal Storm Flowage 6

6.2 Inland Bank 6

6.3 Bordering Vegetated Wetlands 9

6.4 Land Under Water Bodies and Waterways 9

6.5 Riverfront Area 10

7.0 Mitigation Measures 14

7.1 Sediment Barriers 14

7.2 Improvements within the Resource Areas 14

8.0 Conclusions 15

Attachment B: Figures 17

Attachment C: Site Photographs 18

Attachment D: Filing Fee Information 19

Attachment E: Wetland Delineation Report 20

Attachment F: Abutter Notification Information 21

Attachment G: Wetland Resources Plans 22

Attachment H: Wetland Resources Impact Plans 23

Attachment I: NOI Permit Drawings 24

Attachment J: Stormwater Management Report & Checklist 25

Attachment K: Approval of Designation of a Densely Developed Area 26

Attachment L: FEMA Documentation 27

Massachusetts Department of Environmental Protection
Bureau of Resource Protection - Wetlands

WPA Form 3 – Notice of Intent

Massachusetts Wetlands Protection Act M.G.L. c. 131, §40

Provided by MassDEP:

MassDEP File Number

Document Transaction Number

City/Town

Important: When filling out forms on the computer, use only the tab key to move your cursor - do not use the return key.

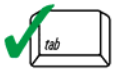

Note: Before completing this form consult your local Conservation Commission regarding any municipal bylaw or ordinance.

A. General Information

1. Project Location (**Note:** electronic filers will click on button to locate project site):

a. Street Address	b. City/Town	c. Zip Code
205 Revere Beach Parkway	Revere	02176

Latitude and Longitude:

d. Latitude	e. Longitude
42º24'00"	70º59'40"

f. Assessors Map/Plat Number	g. Parcel /Lot Number
4	90-3

2. Applicant:

a. First Name	b. Last Name
Kyle	Warwick

c. Organization: 205 Revere Beach Parkway Partners, LLC c/o Gate Residential

d. Street Address: 265 Franklin Street, 6th Floor

e. City/Town	f. State	g. Zip Code
Boston	MA	02110

h. Phone Number	i. Fax Number	j. Email Address
(617) 904-7000		kyle.warwick@redgate-re.com

3. Property owner (required if different from applicant): ☐ Check if more than one owner

a. First Name	b. Last Name

c. Organization

d. Street Address

e. City/Town	f. State	g. Zip Code

h. Phone Number	i. Fax Number	j. Email address

4. Representative (if any):

a. First Name	b. Last Name
Rick	Latini

c. Company: Howard Stein Hudson

d. Street Address: 11 Beacon Street, Suite 1010

e. City/Town	f. State	g. Zip Code
Boston	MA	02108

h. Phone Number	i. Fax Number	j. Email address
(617) 482-7080		rlatini@hshassoc.com

5. Total WPA Fee Paid (from NOI Wetland Fee Transmittal Form):

a. Total Fee Paid	b. State Fee Paid	c. City/Town Fee Paid
$3,150	$1562.50	$1,587.50

A. General Information (continued)

6. General Project Description:

The Project includes demolishing a vacant 45,300+/- square foot building and associated parking lot and constructing a 5-story, 132 key hotel, and a 6-story, 195-unit residential apartment building with associated parking

7a. Project Type Checklist: (Limited Project Types see Section A. 7b.)

1. ☐ Single Family Home
2. ☐ Residential Subdivision
3. ☐ Commercial/Industrial
4. ☐ Dock/Pier
5. ☐ Utilities
6. ☐ Coastal engineering Structure
7. ☐ Agriculture (e.g., cranberries, forestry)
8. ☐ Transportation
9. ☒ Other

7b. Is any portion of the proposed activity eligible to be treated as a limited project (including Ecological Restoration Limited Project) subject to 310 CMR 10.24 (coastal) or 310 CMR 10.53 (inland)?

1. ☐ Yes ☒ No

If yes, describe which limited project applies to this project. (See 310 CMR 10.24 and 10.53 for a complete list and description of limited project types)

2. Limited Project Type

If the proposed activity is eligible to be treated as an Ecological Restoration Limited Project (310 CMR10.24(8), 310 CMR 10.53(4)), complete and attach Appendix A: Ecological Restoration Limited Project Checklist and Signed Certification.

8. Property recorded at the Registry of Deeds for:

Suffolk	29588A
a. County	b. Certificate # (if registered land)
370	26
c. Book	d. Page Number

B. Buffer Zone & Resource Area Impacts (temporary & permanent)

1. ☐ Buffer Zone Only – Check if the project is located only in the Buffer Zone of a Bordering Vegetated Wetland, Inland Bank, or Coastal Resource Area.
2. ☒ Inland Resource Areas (see 310 CMR 10.54-10.58; if not applicable, go to Section B.3, Coastal Resource Areas).

Check all that apply below. Attach narrative and any supporting documentation describing how the project will meet all performance standards for each of the resource areas altered, including standards requiring consideration of alternative project design or location.

B. Buffer Zone & Resource Area Impacts (temporary & permanent) (cont'd)

For all projects affecting other Resource Areas, please attach a narrative explaining how the resource area was delineated.

Resource Area	Size of Proposed Alteration	Proposed Replacement (if any)
a. ☒ Bank	859 (temporary) 1. linear feet	2. linear feet
b. ☒ Bordering Vegetated Wetland	0 1. square feet	2. square feet
c. ☒ Land Under Waterbodies and Waterways	0 1. square feet 3. cubic yards dredged	2. square feet

Resource Area	Size of Proposed Alteration	Proposed Replacement (if any)
d. ☐ Bordering Land Subject to Flooding	1. square feet 3. cubic feet of flood storage lost	2. square feet 4. cubic feet replaced
e. ☐ Isolated Land Subject to Flooding	1. square feet 2. cubic feet of flood storage lost	3. cubic feet replaced
f. ☒ Riverfront Area	Sales Creek 1. Name of Waterway (if available) - **specify coastal or inland**	

2. Width of Riverfront Area (check one):

   ☒ 25 ft. - Designated Densely Developed Areas only

   ☐ 100 ft. - New agricultural projects only

   ☐ 200 ft. - All other projects

3. Total area of Riverfront Area on the site of the proposed project: _____ square feet

4. Proposed alteration of the Riverfront Area:

a. total square feet	b. square feet within 100 ft.	c. square feet between 100 ft. and 200 ft.
10,274 (temporary) 13,540 (permanent) 20,000 sf currently disturbed		

5. Has an alternatives analysis been done and is it attached to this NOI? ☒ Yes ☐ No

6. Was the lot where the activity is proposed created prior to August 1, 1996? ☒ Yes ☐ No

3. ☒ Coastal Resource Areas: (See 310 CMR 10.25-10.35)

Note: for coastal riverfront areas, please complete **Section B.2.f**. above.

Provided by MassDEP:
MassDEP File Number
Document Transaction Number
City/Town

B. Buffer Zone & Resource Area Impacts (temporary & permanent) (cont'd)

Check all that apply below. Attach narrative and supporting documentation describing how the project will meet all performance standards for each of the resource areas altered, including standards requiring consideration of alternative project design or location.

Online Users: Include your document transaction number (provided on your receipt page) with all supplementary information you submit to the Department.

Resource Area	Size of Proposed Alteration	Proposed Replacement (if any)
a. ☐ Designated Port Areas	Indicate size under Land Under the Ocean, below	
b. ☐ Land Under the Ocean	1. square feet 2. cubic yards dredged	
c. ☐ Barrier Beach	Indicate size under Coastal Beaches and/or Coastal Dunes below	
d. ☐ Coastal Beaches	1. square feet	2. cubic yards beach nourishment
e. ☐ Coastal Dunes	1. square feet	2. cubic yards dune nourishment

	Size of Proposed Alteration	Proposed Replacement (if any)
f. ☐ Coastal Banks	1. linear feet	
g. ☐ Rocky Intertidal Shores	1. square feet	
h. ☐ Salt Marshes	1. square feet	2. sq ft restoration, rehab., creation
i. ☐ Land Under Salt Ponds	1. square feet 2. cubic yards dredged	
j. ☐ Land Containing Shellfish	1. square feet	
k. ☐ Fish Runs	Indicate size under Coastal Banks, inland Bank, Land Under the Ocean, and/or inland Land Under Waterbodies and Waterways, above 1. cubic yards dredged	
l. ☒ Land Subject to Coastal Storm Flowage	16,493 (temp); 206,731 (perm) 1. square feet	

4. ☐ Restoration/Enhancement
If the project is for the purpose of restoring or enhancing a wetland resource area in addition to the square footage that has been entered in Section B.2.b or B.3.h above, please enter the additional amount here.

a. square feet of BVW | b. square feet of Salt Marsh

5. ☐ Project Involves Stream Crossings

a. number of new stream crossings | b. number of replacement stream crossings

C. Other Applicable Standards and Requirements

☐ This is a proposal for an Ecological Restoration Limited Project. Skip Section C and complete Appendix A: Ecological Restoration Limited Project Checklists – Required Actions (310 CMR 10.11).

Streamlined Massachusetts Endangered Species Act/Wetlands Protection Act Review

1. Is any portion of the proposed project located in **Estimated Habitat of Rare Wildlife** as indicated on the most recent Estimated Habitat Map of State-Listed Rare Wetland Wildlife published by the Natural Heritage and Endangered Species Program (NHESP)? To view habitat maps, see the *Massachusetts Natural Heritage Atlas* or go to http://maps.massgis.state.ma.us/PRI_EST_HAB/viewer.htm.

   a. ☐ Yes ☒ No

   If yes, include proof of mailing or hand delivery of NOI to:

   Natural Heritage and Endangered Species Program
   Division of Fisheries and Wildlife
   1 Rabbit Hill Road
   Westborough, MA 01581

   2008
   b. Date of map

   If *yes*, the project is also subject to Massachusetts Endangered Species Act (MESA) review (321 CMR 10.18). To qualify for a streamlined, 30-day, MESA/Wetlands Protection Act review, please complete Section C.1.c, and include requested materials with this Notice of Intent (NOI); *OR* complete Section C.2.f, if applicable. *If MESA supplemental information is not included with the NOI, by completing Section 1 of this form, the NHESP will require a separate MESA filing which may take up to 90 days to review (unless noted exceptions in Section 2 apply, see below).*

   c. Submit Supplemental Information for Endangered Species Review*

      1. ☐ Percentage/acreage of property to be altered:

         (a) within wetland Resource Area _____ percentage/acreage

         (b) outside Resource Area _____ percentage/acreage

      2. ☐ Assessor's Map or right-of-way plan of site

2. ☐ Project plans for entire project site, including wetland resource areas and areas outside of wetlands jurisdiction, showing existing and proposed conditions, existing and proposed tree/vegetation clearing line, and clearly demarcated limits of work **

   (a) ☐ Project description (including description of impacts outside of wetland resource area & buffer zone)

   (b) ☐ Photographs representative of the site

---

* Some projects **not** in Estimated Habitat may be located in Priority Habitat, and require NHESP review (see http://www.mass.gov/eea/agencies/dfg/dfw/natural-heritage/regulatory-review/). Priority Habitat includes habitat for state-listed plants and strictly upland species not protected by the Wetlands Protection Act.

** MESA projects may not be segmented (321 CMR 10.16). The applicant must disclose full development plans even if such plans are not required as part of the Notice of Intent process.

C. Other Applicable Standards and Requirements (cont'd)

(c) ☐ MESA filing fee (fee information available at http://www.mass.gov/dfwele/dfw/nhesp/regulatory_review/mesa/mesa_fee_schedule.htm). Make check payable to "Commonwealth of Massachusetts - NHESP" and ***mail to NHESP*** at above address

*Projects altering **10 or more acres** of land, also submit:*

(d) ☐ Vegetation cover type map of site

(e) ☐ Project plans showing Priority & Estimated Habitat boundaries

(f) OR Check One of the Following

1. ☐ Project is exempt from MESA review.
Attach applicant letter indicating which MESA exemption applies. (See 321 CMR 10.14, http://www.mass.gov/dfwele/dfw/nhesp/regulatory_review/mesa/mesa_exemptions.htm; the NOI must still be sent to NHESP if the project is within estimated habitat pursuant to 310 CMR 10.37 and 10.59.)

2. ☐ Separate MESA review ongoing. a. NHESP Tracking # b. Date submitted to NHESP

3. ☐ Separate MESA review completed.
Include copy of NHESP "no Take" determination or valid Conservation & Management Permit with approved plan.

3. For coastal projects only, is any portion of the proposed project located below the mean high water line or in a fish run?

a. ☐ Not applicable – project is in inland resource area only b. ☒ Yes ☐ No

If yes, include proof of mailing, hand delivery, or electronic delivery of NOI to either:

South Shore - Cohasset to Rhode Island border, and the Cape & Islands:

Division of Marine Fisheries -
Southeast Marine Fisheries Station
Attn: Environmental Reviewer
1213 Purchase Street – 3rd Floor
New Bedford, MA 02740-6694
Email: DMF.EnvReview-South@state.ma.us

North Shore - Hull to New Hampshire border:

Division of Marine Fisheries -
North Shore Office
Attn: Environmental Reviewer
30 Emerson Avenue
Gloucester, MA 01930
Email: DMF.EnvReview-North@state.ma.us

Also if yes, the project may require a Chapter 91 license. For coastal towns in the Northeast Region, please contact MassDEP's Boston Office. For coastal towns in the Southeast Region, please contact MassDEP's Southeast Regional Office.

C. Other Applicable Standards and Requirements (cont'd)

Online Users: Include your document transaction number (provided on your receipt page) with all supplementary information you submit to the Department.

4. Is any portion of the proposed project within an Area of Critical Environmental Concern (ACEC)?

   a. ☒ Yes ☐ No

   If yes, provide name of ACEC (see instructions to WPA Form 3 or MassDEP Website for ACEC locations). **Note:** electronic filers click on Website.

   b. ACEC: Rumney Marshes

5. Is any portion of the proposed project within an area designated as an Outstanding Resource Water (ORW) as designated in the Massachusetts Surface Water Quality Standards, 314 CMR 4.00?

   a. ☒ Yes ☐ No

6. Is any portion of the site subject to a Wetlands Restriction Order under the Inland Wetlands Restriction Act (M.G.L. c. 131, § 40A) or the Coastal Wetlands Restriction Act (M.G.L. c. 130, § 105)?

   a. ☐ Yes ☒ No

7. Is this project subject to provisions of the MassDEP Stormwater Management Standards?

   a. ☒ Yes. Attach a copy of the Stormwater Report as required by the Stormwater Management Standards per 310 CMR 10.05(6)(k)-(q) and check if:

      1. ☐ Applying for Low Impact Development (LID) site design credits (as described in Stormwater Management Handbook Vol. 2, Chapter 3)

      2. ☒ A portion of the site constitutes redevelopment

      3. ☒ Proprietary BMPs are included in the Stormwater Management System.

   b. ☐ No. Check why the project is exempt:

      1. ☐ Single-family house

      2. ☐ Emergency road repair

      3. ☐ Small Residential Subdivision (less than or equal to 4 single-family houses or less than or equal to 4 units in multi-family housing project) with no discharge to Critical Areas.

D. Additional Information

☐ This is a proposal for an Ecological Restoration Limited Project. Skip Section D and complete Appendix A: Ecological Restoration Notice of Intent – Minimum Required Documents (310 CMR 10.12).

Applicants must include the following with this Notice of Intent (NOI). See instructions for details.

Online Users: Attach the document transaction number (provided on your receipt page) for any of the following information you submit to the Department.

1. ☒ USGS or other map of the area (along with a narrative description, if necessary) containing sufficient information for the Conservation Commission and the Department to locate the site. (Electronic filers may omit this item.)

2. ☒ Plans identifying the location of proposed activities (including activities proposed to serve as a Bordering Vegetated Wetland [BVW] replication area or other mitigating measure) relative to the boundaries of each affected resource area.

D. Additional Information (cont'd)

3. [X] Identify the method for BVW and other resource area boundary delineations (MassDEP BVW Field Data Form(s), Determination of Applicability, Order of Resource Area Delineation, etc.), and attach documentation of the methodology.

4. [X] List the titles and dates for all plans and other materials submitted with this NOI.

Notice of Intent Permit Set, 205 Revere Beach Parkway (See Attachment I)	
a. Plan Title	
Howard Stein Hudson	Richard E. Latini, P.E.
b. Prepared By	c. Signed and Stamped by
December 22, 2016	See Plans (generally 1"=20')
d. Final Revision Date	e. Scale
f. Additional Plan or Document Title	g. Date

5. [ ] If there is more than one property owner, please attach a list of these property owners not listed on this form.

6. [ ] Attach proof of mailing for Natural Heritage and Endangered Species Program, if needed.

7. [X] Attach proof of mailing for Massachusetts Division of Marine Fisheries, if needed.

8. [X] Attach NOI Wetland Fee Transmittal Form

9. [X] Attach Stormwater Report, if needed.

E. Fees

1. [ ] Fee Exempt: No filing fee shall be assessed for projects of any city, town, county, or district of the Commonwealth, federally recognized Indian tribe housing authority, municipal housing authority, or the Massachusetts Bay Transportation Authority.

Applicants must submit the following information (in addition to pages 1 and 2 of the NOI Wetland Fee Transmittal Form) to confirm fee payment:

1982	12/20/16
2. Municipal Check Number	3. Check date
1983	12/20/16
4. State Check Number	5. Check date
John	Myer
6. Payor name on check: First Name	7. Payor name on check: Last Name

Provided by MassDEP:

MassDEP File Number

Document Transaction Number

City/Town

F. Signatures and Submittal Requirements

I hereby certify under the penalties of perjury that the foregoing Notice of Intent and accompanying plans, documents, and supporting data are true and complete to the best of my knowledge. I understand that the Conservation Commission will place notification of this Notice in a local newspaper at the expense of the applicant in accordance with the wetlands regulations, 310 CMR 10.05(5)(a).

I further certify under penalties of perjury that all abutters were notified of this application, pursuant to the requirements of M.G.L. c. 131, § 40. Notice must be made by Certificate of Mailing or in writing by hand delivery or certified mail (return receipt requested) to all abutters within 100 feet of the property line of the project location.

1. Signature of Applicant	2. Date 12/21/16
3. Signature of Property Owner (if different)	4. Date
5. Signature of Representative (if any)	6. Date 12/21/16

For Conservation Commission:
Two copies of the completed Notice of Intent (Form 3), including supporting plans and documents, two copies of the NOI Wetland Fee Transmittal Form, and the city/town fee payment, to the Conservation Commission by certified mail or hand delivery.

For MassDEP:
One copy of the completed Notice of Intent (Form 3), including supporting plans and documents, one copy of the NOI Wetland Fee Transmittal Form, and a **copy** of the state fee payment to the MassDEP Regional Office (see Instructions) by certified mail or hand delivery.

Other:
If the applicant has checked the "yes" box in any part of Section C, Item 3, above, refer to that section and the Instructions for additional submittal requirements.

The original and copies must be sent simultaneously. Failure by the applicant to send copies in a timely manner may result in dismissal of the Notice of Intent.

Attachment A – Project Narrative

1.0 Project Overview

This Notice of Intent (NOI) has been prepared by Howard Stein Hudson (HSH) on behalf of 205 Revere Beach Parkway Partners, LLC (the "Applicant"). The NOI has been prepared in accordance with the Massachusetts Wetland Protection Act (MGL c.131 s.40) and implementing Regulations (310 CMR 10.00) (the "WPA") and Title 16 of the City of Revere City Ordinances and the Wetlands By-law.

The project seeks to redevelop a long-abandoned parcel located at 205 Revere Beach Parkway, Revere, Massachusetts. The vacant building on-site was last occupied by Shaw's supermarket in 2011. It is proposed to demolish the existing building to allow the construction of a 132-key hotel, and a 195-unit residential building.

2.0 Existing Conditions

The Project Site is a 6.2± acres elongated parcel running east to west along Revere Beach Parkway. It contains a vacant, 45,300± square feet (sf) building and 166,000± sf paved parking lot. Sales Creek is located in the back of the site, separating the parcel from the residential neighborhood to the north. Suffolk Downs is located on the opposite side of Revere Beach Parkway, the MBTA Blue Line's Beachmont Station is located a little over 1/8 of a mile to the south, and Revere Beach is located about ¼ mile to the northeast.

Wetlands on-site include Sales Creek, a tidally influenced River, with a 25-foot Riverfront Area (see approval designating location as a Densely Developed Area in Attachment K); Land Subject to Coastal Storm Flowage (LSCSF); Bordering Vegetated Wetlands (BVW); Land under Water Bodies and Waterways; and Inland Bank with associated 100-foot Buffer Zone. Additionally the wetlands are considered an Area of Critical Environmental Concern (ACEC) and Outstanding Resource Water as they form part of the upper reaches of the Rumney Marshes system draining towards Belle Isle Inlet and ultimately Boston Harbor. The limit of the ACEC on the site is coincident with the limit of the jurisdiction under M.G.L. C. 131, s. 40, which is the 100-year floodplain or LSCSF.

A majority of the Project Site is considered LSCSF per the Flood Insurance Rate Map and Flood Insurance Study available from the Federal Emergency Management Agency (FEMA) that became effective on March 16, 2016. This designation was confirmed with FEMA (See Attachment L). The

base flood elevation at the Project Site is 11 feet North American Vertical Datum of 1988 (NAVD). Almost the entire Site is at or below this elevation.

The current Massachusetts Natural Heritage and Endangered Species Program (NHESP) Atlas (MassGIS, 2008) does not identify any areas of estimated habitat (310 CMR 10.59) in or near the Project area.

A majority of the parking area drains via overland flow to Sales Creek. A couple of catch basins in front of the building and the building's roof drains appear to tie into one of two 12-inch pipe that discharge into the creek. The remainder of the site drains towards Revere Beach Parkway including 13,000± sf of the westerly portion of the parking lot. There is negligible water quality treatment or infiltration of stormwater runoff prior to it reaching Sales Creek. Refer to the Stormwater Management Report for additional information.

3.0 Proposed Development

The Project will transform the existing vacant site with limited street activity into a vibrant new development. As a transit-oriented development (TOD), the Proponent anticipates a significant number of the residents, workers, and visitors, will access the site via walking, public transit, and/or by bicycle.

The vacant grocery store will be demolished to allow construction of the proposed mixed-use development comprising two buildings: a 5-story hotel consisting of 132 keys and a 6-story multi-family residential building consisting of 195 total residential units (all above the first floor) and ground level amenities, landscaped areas, and resident parking. The hotel will have 8 covered spaces, the residential building will have 59 garage spaces. The proposed surface parking lot will provide 231 spaces and be located within the existing impervious area of the site.

Due to the recent increase in the base flood elevation from 6' NAVD to 11' NAVD, as shown on the FIRM dated March 16, 2016, a substantial portion of the site will need to be raised above its current elevation to provide the appropriate floodproofing of the proposed structures. A retaining wall is proposed along portions of the back of the site adjacent to Sales Creek to allow for the required grade change.

The proposed buildings' first floor elevations will be set at 11.50' NAVD with the residential units being located on Floors 2 (23.50' NAVD) through 6. Electrical equipment similarly will be installed above the base flood elevation. The base flood elevation of 11' NAVD is well above the Mean Higher High Water elevation of approximately 4.8' NAVD.

The proposed development will result in a significant improvement over existing conditions. The development will increase open space by over 63,000± sf and decrease the impervious area by over 31,500± sf. A stormwater management system will be incorporated to provide infiltration and water quality treatment of stormwater runoff before it reaches Sales Creek. Some of the structural Best Management Practices (BMPs) proposed include deep sump catch basins, stormwater treatment units and subsurface infiltration systems. An operation and maintenance plan will be employed to ensure the continued functioning of the stormwater management system. Construction period controls will be used to prevent erosion and transport of sediment and other pollutants off-site or into Sales Creek. A Storm Water Pollution Prevention Plan will be developed as part of the Project's General Permit for Construction Activity under the EPA's NPDES permit program. (See Attachment J for additional information on the stormwater management system).

The Project Site is located in the City's Highway Business District and utilities are available adjacent to the site. This includes a 14-inch water main and an 8-inch and 20-inch sewer in Revere Beach Parkway. Preliminary discussions with the City of Revere's Public Works Department indicate that water and sewer systems can accommodate the development. The City is currently updating their models to include the development to confirm no upgrades are required to the municipal systems.

4.0 Alternatives Analysis

An Alternatives Analysis is required for any project proposing work within the Riverfront Area under the Wetlands Protection Act Regulations. 310 CMR 10.58(4)(c) of the WPA states that "*there must be no practicable and substantially equivalent economic alternative to the proposed project with less adverse effects on the interests identified in M.G.L. c. 131 § 40.*" The following section describes the alternatives for proposed work within the 25-foot Riverfront Area. Due to the nature and scope of this project, off-site options are not viable. The Applicant has taken careful and thoughtful consideration of the Riverfront Area and proximity to resource areas in this redevelopment.

4.1 NO BUILD

The existing, vacant site contains a derelict building and a large, paved parking lot. Stormwater runoff off from the parking lot primarily drains overland, down the bank and into the stream. This results in bank erosion and sediment transport into Sales Creek. Leaving the unused building and parking lot will result in deteriorating conditions causing adverse impacts to the surrounding properties.

4.2 GROCERY STORE

The Project will be an improvement over the site's former use as a grocery store. The proposed residential and hotel uses will generate less traffic and improve existing conditions by creating safer access to the site, improving stormwater runoff quality, increasing open space and decreasing the impervious area of the site. The total unadjusted daily trips generated by the former Shaw's grocery store are estimated at 4,222. The total unadjusted daily trips for the proposed development are estimated at 2,374.

4.3 RESIDENTIAL

The Proponent had proposed a multi-family, residential development in 2015. That proposal would have provided 301 residential units in two 6-story buildings, and generated 2,002 unadjusted vehicle daily trips. This alternative would permanently impact 730± linear feet of Bank (120± new alteration) and 23,700 square feet of Riverfront Area (3,700± sf new alteration).

This proposal was withdrawn due to local opposition to a project consisting entirely of residential units.

4.4 PREFERRED ALTERNATIVE

The Proponent specializes in developing multi-family, transit-oriented developments having recently delivered very popular housing options in Chelsea, Somerville, and Quincy, MA. The Proponent is partnering with a hotel operator to provide the commercial base desired by the City. The development of a multi-family project is well-suited for the Project Site. The area is very attractive to the young professionals that typically occupy the quality, market-rate housing being proposed. The Project Site is walking distance to several amenities including shopping, public transportation, and Revere Beach. A successful hotel operation is expected due to the Project Site's proximity to several modes of transportation and to Logan International Airport.

5.0 Wetland Resource Area Impacts

The Project lies within previously disturbed areas and results in an improvement over existing conditions. Wetlands resource areas within the Project Site include: (1) Land Subject to Coastal Storm Flowage; (2) Inland Bank and associated 100-foot Buffer Zone; (3) Bordering Vegetated Wetlands; (4) Land under Water Bodies and Waterways; and (5) Riverfront Area.

5.1 WETLAND IMPACTS

Due to the amount of past disturbance and neglect the wetlands are in fair to poor condition. Most of the proposed work and impacts to wetland resource areas will occur within the existing impervious areas currently occupied by the vacant on-site building or paved parking. New temporary and permanent impacts are associated with the construction of a retaining wall being proposed to raise

the site grades in response to the recent increase in the base flood elevation. The temporary impacts are required in order to install the wall and will be restored upon completion, but even this area appears degraded consisting of fill material, debris and low-quality vegetation. The parking area layout and retaining wall have been redesigned to avoid permanent impacts to Inland Bank. Additional impacts are associated with the repair/replacement of the two outfalls servicing the proposed stormwater management system. (See Attachment H – Wetland Resources Impact Plans).

Topsoil and native species plantings will be placed adjacent to Sales Creek within areas disturbed during construction of the retaining wall and improvements to the existing storm drain outfalls. This work will improve erosion control and wildlife habitat as the existing plant community consists almost entirely of non-native and invasive plant species. Norway maples (*Acer platanoides*) dominate, creating dense shade which limits the growth of understory plants that would provide variety and stabilize the stream bank. Other invasive species along the bank of Sales Creek include tree-of-heaven (*Ailanthus altissima*), Japanese knotweed (*Fallopia japonica*), Oriental bittersweet (*Celastrus orbiculatus*), multiflora rose (*Rosa multiflora*), and black locust (*Robinia pseudoacacia*). Common reed (*Phragmites australis*) is present within and throughout the Creek.

The Project will remove major debris in the stream and surface trash and debris from the bank of Sales Creek within the Project Site. The Proponent will work with the City to support plans and efforts for additional clean-up and restoration efforts of Sales Creek.

The proposed development will result in a significant improvement over existing conditions, restoring 6,461± sf of degraded area within the Riverfront Area. A detailed Riverfront Area Mitigation Plan will be submitted to the Revere Conservation Commission and MassDEP during the Notice of Intent (NOI) review process.

6.0 Compliance with Performance Standards

The wetland resources in the Project area are shown on the Plans provided in Attachment G. The Project is a redevelopment of a previously disturbed site and is designed to comply with the Massachusetts Wetlands Protection Act (M.G.L. Chapter 131, Section 40) and it's implementing Regulations (310 CMR 10.00), including the requirements for Riverfront Area (310 CMR 10.58). There are no proposed impacts to or work within BVW or LUWW.

The following table provides a summary of wetland resource area impacts.

RESOURCE AREA IMPACT TABLE			
Resource Area	**Impacts**		
	Temporary	**Permanent**	**Total**
LSCSF	16,493 SF	206,731 SF	223,224 SF
Inland Bank	859 LF	0 LF	859 LF
Riverfront Area			
New Alteration	10,274 SF	113 SF	10,387
Redevelopment/Degraded	0 SF	13,425 SF	13,425 SF
Proposed Mitigation	---	6,461 SF	6,461 SF

The following sections describe the projects compliance with the performance standards for each resource area as applicable under Section 310 CMR 10.00 of the Wetlands Protection Act for LSCSF, Inland Bank, and Riverfront Area.

6.1 LAND SUBJECT TO COASTAL STORM FLOWAGE

The Wetlands Protection Act currently lacks standards for this coastal resource area. The proposed buildings will be elevated above the 100-year flood elevation protecting them from potential flooding for this storm event. The City of Revere does not have any additional protections for this resource area.

6.2 INLAND BANK

Inland Bank is defined at 310 CMR 10.54(2) as "*the portion of land surface which normally abuts and confines a water body. It occurs between a water body and a vegetated bordering wetland and adjacent flood plain, or, in the absence of these, it occurs between a water body and an upland*"

The replacement of two outlet pipes and riprap protection, and the retaining wall will occur along portions of the bank on the north side of the existing chain link fence.

6.2.1 State Performance Standards – 310 CMR 10.54(4)

a) *Where the presumption [of significance to numerous interests such as flood control and storm damage prevention as described in 310 CMR 10.54(1) and] set forth in 310 CMR 10.54(3) is not overcome, any proposed work on a Bank shall not impair the following:*

1. *The physical stability of the bank;*

In addition to the *Phragmites*-dominant current condition of Sales Creek, the predominance of exotic invasive plant species, which are established on and landward of the stream bank, has already significantly impaired the physical stability of the bank and land adjacent to the bank. The establishment of invasive species including Norway maple, Japanese knotweed, Oriental bittersweet, tree-of-heaven, multiflora rose, and black locust has resulted in a nearly denuded soils condition on much of the bank and in much of the buffer zone. The invasive woody and herbaceous species have outcompeted native woody and herbaceous plant species, an assemblage of which would ordinarily serve a valuable bank soil and bank buffer zone soil stabilizing function.

The excavation work required to install the proposed retaining wall will impact the bank itself; however, once the wall is constructed, the affected bank portion(s) will be rebuilt to original grade and immediately stabilized through placement of erosion control materials and dense native plantings and seeding. Work associated with installation of the discharge pipes, which will carry treated stormwater to Sales Creek, will involve placement of energy-dissipating rip-rap and incorporation of other erosion control BMPs at the pipe outlet locations. The stream bank's physical stability will be maintained as a result of this work. The proposed removal of the existing chain-link fence, guardrail, and portions of parking lot pavement will require alteration within the bank buffer zone; however, much of the area altered as a result of removal of these feature will be stabilized with plantings and other erosion control BMPs.

2. *The water carrying capacity of the existing channel within the Bank;*

   Because the project will not result in any permanent changes to either the footprint orientation of Sales Creek, to the stream bed topography, or to the materials that constitute the stream bed, the existing water carrying capacity of the stream channel will not be reduced by any measure.

3. *Ground water and surface water quality;*

   The proposed improvements to the site's stormwater management infrastructure as a result of the project, which includes an overall reduction in the total amount of impervious surface area by approximately 31,500 sf, will result in an overall reduction in pollutants reaching Sales Creek. If the banks of Sales Creek are those where surface water is recharging the groundwater, then a positive effect on the ground water from surface water improvement would be expected.

4. *The capacity of the Bank to provide breeding habitat, escape cover and food for fisheries;*

   The embankments that confine Sales Creek are nearly, if not entirely, devoid of bank undercuts and overhangs. *Phragmites australis* occupies the vast majority of the stream's bank-to-bank footprint for nearly its entire length adjacent to the project site making Sales Creek a very low quality fisheries habitat. The waterway's embankments, which were very likely structurally reconfigured and simplified over time to accommodate surrounding urban development, form a channel that is predominantly linear (i.e., no meanders) along the site boundary. Variability in stream depths adjacent to the banks appears absent. Together, these conditions have likely reduced the stream bank's capacity to provide adequate breeding, feeding, and escape cover features necessary for fisheries species.

   Water quality appears adversely impacted to a significant degree as a result of existing degraded conditions of the surrounding area. These conditions include a much reduced (in width) vegetated stream corridor buffer zone, reduced stream flow velocities and variability, a poor stormwater management infrastructure for the surrounding developed areas, which are allowing point-source discharges into the waterway, close proximity to various pollutant sources, and the presence of nearby land uses that exacerbate surface water quality degradation, such as dense residential development and heavily-travelled public roadways both of which account for large areas of impervious ground surfaces.

5. *The capacity of the Bank to provide important wildlife habitat functions.*

   In addition to the observations described in the previous section specific to any Sales Creek bank features that may be supporting/not supporting fisheries, we emphasize that the plant communities along the Sales Creek banks lack a diversity of native species in each of the plant community layers as a result of gradual invasive plant species establishment. A section of stream bank where, for example, Japanese knotweed has formed a monoculture on and landward of the bank, exhibits an extremely low wildlife habitat value. On bank and within bank buffer areas over which Norway maple is predominant, native plant diversity and quantity has also suffered significantly, which has resulted in decreased wildlife habitat quality. While a Wildlife Habitat Evaluation (WHE) will provide additional details and findings, a preliminary assessment suggests that important wildlife habitat functions provided by the Sales Creek bank appear absent, or greatly reduced.

The project proposes to reconstruct, revegetate, and stabilize any bank area altered by removal of existing fencing and installation of retaining wall. The project will also increase the amount of vegetated open space on site within the Sales Creek bank buffer zone. Given that the bank's wildlife habitat functional capacity in its existing condition is extremely low, there would be little to no significant loss in capacity from the project. It is expected that an increase in vegetated open space within the Sales Creek bank buffer zone will benefit the capacity of the bank to provide some wildlife habitat value.

Because of the amount of proposed bank alteration, a Wildlife Habitat Evaluation (WHE) performed in accordance with 310 CMR10.60 will be completed in order to obtain a better understanding of the stream's existing conditions as they relate to the provision of wildlife habitat. The report will also provide an opinion as to how proposed elements of the project will improve the Sales Creek wildlife habitat capacity/value. The WHE will be prepared for the NOI review process and submitted to the Revere Conservation Commission and MassDEP for review and comment.

Based upon the project revisions, the project complies with the WPA for the performance standards for Inland Bank. The City of Revere does not have any additional protections for this resource area.

6.3 BORDERING VEGETATED WETLANDS

Bordering Vegetated Wetlands (BVWs) *are defined in 310 CMR 10.55(2) as freshwater wetlands which border on creeks, rivers, streams, ponds and lakes. The types of freshwater wetlands are wet meadows, marshes, swamps and bogs. Bordering Vegetated Wetlands are areas where the soils are saturated and/or inundated such that they support a predominance of wetland indicator plants.*

The Project does not propose work within this resource area. The City of Revere does not have any additional protections for this resource area.

6.4 LAND UNDER WATER BODIES AND WATERWAYS

Land Under Water Bodies is defined for this project in 310 CMR 10.56(2)(a) as " *the land beneath any creek, river, stream, pond, or lake".* As specified in 310 CMR 10.56(2)(c), the boundary of this area is the mean annual low water level.

The Project does not propose work within this resource area. The City of Revere does not have any additional protections for this resource area.

6.5 RIVERFRONT AREA

Riverfront Area is defined for this Project in 310 CMR 10.58(2)(a)(3) as *"the area of land between a river's mean annual high-water line measured horizontally outward from the river and a parallel line locate 200 feet away except that the parallel line is located…*

b. *25 feet away in densely developed areas, as designated by the Secretary of the Executive Office of Energy and Environmental Affairs pursuant to 301 CMR 10.00: Densely Developed Areas."* As noted above, Sales Creek is a tidally influenced River, with a 25-foot Riverfront Area (see approval designating location as a Densely Developed Area in Attachment K).

The project includes components of both New Development (310 CMR 10.58(4)) and Redevelopment (310 CMR 10.58(5)). This section describes the projects compliance with the Riverfront Area performance standards under Section 310 CMR 10.58(4), followed by a discussion of project compliance with Section 310 CMR 10.58(5)of the Wetlands Protection Act.

6.5.1 *State Performance Standards – 310 CMR 10.58(4)*

The general performance standard for work in the Riverfront Area under 310 CMR 10.58(4) of the WPA states *"Where the presumption set forth in 310 CMR 10.58(3) is not overcome, the applicant shall prove by a preponderance of the evidence that there are no practicable and substantially equivalent economic alternatives to the proposed project with less adverse effects on the interests identified in M.G.L. c.131 §40."*

In its current condition the Riverfront Area within the Project Site makes no material contribution to the interests described in 310 CMR 10.58(3). It does not protect water resources or wildlife and may (likely does) contribute to the pollution of the resource. Therefore the presumption of significant contribution does not apply here. Nonetheless, there are also no practical alternatives to the proposed development with less of an adverse effect on the Riverfront Area. The site has been vacant for years, as the retail use there went out of business. Recent attempts to redevelopment the site for either a hotel use or a residential use have failed and a combined hotel and residential use at the proposed intensity of use has been the only redevelopment program that has proven feasible. Within that overall program, alternatives for the provision of parking have been considered, but are not feasible. Proposed parking ratios are already minimized, both from a market and a neighborhood acceptance perspective. The mid-range rents in this marketplace for both the apartments and the hotel will not support the construction of structured parking outside of the principal structures. Alternatives to the proposed retaining wall that might allow a more gradual slope towards the water would only wind up altering, and adversely affecting, more resource area.

(a) *Protection of Other Resource Areas. The work shall meet the performance standard for all other resource areas within the riverfront area…*

All proposed project work meets the performance standards applicable to the other wetland resource areas presents at the site. A discussion regarding proposed work on and near Inland Bank of Sales Creek was provided in the previous section.

(b) *Protection of Rare Species*

No portion of the Site is within either Estimated Habitats of Rare Wildlife (310 CMR 10.59) or Priority Habitats of Rare Species (321 CMR 10.02) as mapped by NHESP.

(c) *Practicable and Substantially Equivalent Economic Alternatives. There must be no practicable and substantially equivalent economic alternatives to the proposed project with less adverse effects on the interest identified in M.G.L. c.131 §40.*

A discussion of alternatives was provided in previous sections. The Project will improve the condition of the Site. The site has been vacant for years and the proposed mixed-use development would appear to be a better use than the previous use as a grocery store from an environmental and traffic generation perspective.

(d) *No Significant Adverse Impact: The work, including proposed mitigation measures, must have no significant adverse impact on the riverfront area to protect the interest identified in M.G.L. c.131 §40…*

2. *Within 25 foot riverfront areas, any proposed work shall cause no significant adverse impact by:*

   a. *Limiting alteration to the maximum extent feasible, and at a minimum, preserving or establishing a corridor of undisturbed vegetation of a maximum feasible width. Replication and compensatory storage required to meet other resource area performance standards are allowed within this area; structural stormwater management measures shall be allowed only when there is no practicable alternative;*

      The new alteration within the Riverfront Area is limited to approximately 113 sf, which is required for construction of the retaining wall. Areas temporarily impacted will be restored upon completion. As noted in previous sections, the "undeveloped" portions of the Riverfront Area are low value and primarily consist of invasive species.

   b. *Providing stormwater management according to standards established by the Department;*

The project has been designed to comply with the Massachusetts Stormwater Management Standards.

c. *Preserving the capacity of the riverfront area to provide important wildlife habitat functions. Work shall not result in an impairment of the capacity to provide vernal pool habitat when identified by evidence from a competent source but not yet certified; and*

There are no vernal pools or vernal pool habitat on this site. As noted above in relation to the Inland Bank, the undeveloped Riverfront Areas on which Norway maple is predominant, native plant diversity and quantity has also suffered significantly, which has resulted in decreased wildlife habitat quality. While a Wildlife Habitat Evaluation (WHE) will provide additional details and findings, a preliminary assessment suggests that important wildlife habitat functions provided by the Sales Creek Riverfront Area appear absent, or greatly reduced. A WHE performed in accordance with 310 CMR10.60 will be completed in order to obtain a better understanding of the Riverfront Area's existing conditions as they relate to the provision of wildlife habitat. The report will also provide an opinion as to how proposed elements of the project will improve the Sales Creek wildlife habitat capacity/value. The WHE will be prepared for the NOI review process and submitted to the Revere Conservation Commission and MassDEP for review and comment.

d. *Proposed work shall not impair groundwater or surface water quality by incorporating erosion and sedimentation controls and other measures to attenuate nonpoint source pollution.*

The Proponent has committed to BMPs that will serve to protect resource areas on the site and will install erosion and sedimentation controls prior to construction.

6.5.2 *State Performance Standards – 310 CMR 10.58(5)*

The general performance standard for work in the Riverfront Area under 310 CMR 10.58(5) of the WPA states that "*Notwithstanding the provisions of 310 CMR 10.58(4)(c) and (d), the issuing authority may allow work to redevelop a previously developed riverfront area, provided the proposed work improves existing conditions.*"

(a) *At a minimum, proposed work shall result in an improvement over existing conditions of the capacity of the riverfront area to protect the interests identified in M.G.L. c. 131 § 40.*

Significant improvement over existing degraded conditions within the 25 foot-wide Riverfront Area at the site will occur. This improvement will result primarily from the 31,500 sf site-wide reduction in the total amount of impervious surface area. A result of

necessary regrading work and impervious surface removal will be the establishment of new vegetated area in the northeast corner of the site between the limits of the development and Sales Creek.

(b) *Stormwater management is provided according to the standards established by the Department (of Environmental Protection)*

The proposed stormwater management system has been designed to meet or, in certain aspects, exceed the standards required or desirable for a site redevelopment project. The result will be a significant improvement over the existing conditions, which currently allow for a pollutant load input to Sales Creek that is not supportive of the WPA interests.

(c) *…proposed work shall not be located…closer than existing conditions within 25 foot riverfront areas, except in accordance with 310 CMR 10.58(5)(f) or (g).*

There will be some temporary work occurring closer to the creek than existing conditions that will be returned to a natural, vegetated state. The proposed work also includes removing chain link fence and pavement areas within the Riverfront Area. Approximately 113 sf of new alteration will occur within the Riverfront Area. Over 6,400 sf of the Riverfront Area will be restored as part of the project, 3,700 sf of which is currently paved. A detailed Riverfront Area Mitigation Plan will be submitted to the Revere Conservation Commission and MassDEP during the Notice of Intent (NOI) review process.

(d) *Proposed work, including expansion of existing structures, shall be located outside the riverfront area or toward the riverfront area boundary and away from the river…*

Permanent impacts occur at the existing fence line and away from the river with the exception of 113± sf near the middle of the site associated with the proposed retaining wall. However, 3,700± sf of impervious area is being removed within the Riverfront Area as a result of the Project.

(e) *The area of proposed work shall not exceed the amount of degraded area, provided that the propose work may alter up to 10% if the degraded area is less than 10% of the riverfront area..*

As mentioned above, there is 113± sf of permanent impact proposed beyond the existing fence line. The Project will mitigate this by restoring 6,400± sf of currently degraded area.

(f) *When an applicant proposes restoration on-site of degraded riverfront area, alteration may be allowed notwithstanding the criteria of 310 CMR(5)(c), (d), and (e) at a ratio in square feet of at least 1:1 of restored area to area of alteration not conforming to the criteria.*

Work outside of previously degraded areas will be temporary with the exception of an area of 113± sf. However, the proposed work will remove approximately 3,700± sf of pavement, which is well over a 2:1 ratio, within the Riverfront Area.

(g) *When an applicant proposes mitigation either on-site or in the riverfront area within the same general area of the river basin, alteration may be allowed notwithstanding the criteria of 310 CMR 10.58(5)(c), (d), or (e) at a ratio in square feet of at least 2:1 of mitigation area to area of alteration not conforming to the criteria…*

See above for proposed mitigation.

Based upon the project revisions, the project complies with the WPA for the new development and the redevelopment performance standards for Riverfront Area. The City of Revere does not have any additional protections for this resource area.

7.0 Mitigation Measures

7.1 SEDIMENT BARRIERS

Stormwater discharges during construction will be managed in accordance with a Stormwater Pollution Prevention Plan ("SWPPP") prepared in accordance with the U.S. Environmental Protection Agency NPDES Stormwater Construction General Permit for Massachusetts. A copy of the SWPPP will be provided to the Commission prior to the start of construction. Implementation of the SWPPP will incorporate sedimentation and erosion control measures and other BMPs. Siltation barriers composed of silt fencing will be installed as shown on the Permit Drawings prior to the initiation of proposed work. These siltation barriers will demarcate the limit of work, form a work envelope and provide additional assurance that construction equipment will stay within the proposed limit of work. All barriers will remain in place until disturbed areas are stabilized. An adequate stockpile of erosion control materials will be onsite at all times for emergency or routine replacement. Orange construction fencing will also be utilized to demarcate the limit of work in select locations.

7.2 IMPROVEMENTS WITHIN THE RESOURCE AREAS

The Project will result in the increase of open space and landscaping, and the reduction of impervious areas, and will incorporate a new stormwater management system. The Project will also remove surface trash and debris on-site including along the slope abutting Sales Creek and provide improvement to the creek and bank. The following mitigation measures are proposed:

<u>Stormwater Management:</u> A stormwater management system will be incorporated to provide infiltration and water quality treatment of stormwater runoff before it reaches Sales Creek. Some of the structural Best Management Practices (BMPs) proposed include deep sump catch basins, stormwater treatment units and subsurface infiltration systems. An operation and maintenance plan will be employed to ensure the continued functioning of the stormwater management system. Construction period controls will be used to prevent erosion and transport of sediment and other

pollutants off-site or into Sales Creek. A Storm Water Pollution Prevention Plan will be developed as part of the Project's General Permit for Construction Activity under the EPA's NPDES permit program.

The project will result in improved water quality of the stormwater reaching Sales Creek. The project will provide more opportunity for rainfall to infiltrate into the ground, and result in a decrease in peak stormwater discharges and volumes from the site.

Open Space: The Project is expected to result in an increase of open space of over 63,000 square feet with a decrease of impervious area of over 31,500 square feet. The preferred alternative will replace some of the existing paved parking on the easterly end of the Site with landscaping. The Project also includes the construction of a public, linear park along Revere Beach Parkway.

Sales Creek: Topsoil and native species plantings will be placed adjacent to Sales Creek within areas disturbed during construction of the retaining wall and improvements to the existing storm drain outfalls. This work will improve erosion control and wildlife habitat as the existing plant community consists almost entirely of non-native and invasive plant species which include Norway maple, tree-of-heaven, Japanese knotweed, Oriental bittersweet, multiflora rose, and black locust. Common reed is present within and throughout the Creek.

The Project will remove major debris in the stream and surface trash and debris from the bank of Sales Creek within the Project Site. The Proponent will work with the City to support plans and efforts for additional clean-up and restoration efforts of Sales Creek.

The proposed development will result in a significant improvement over existing conditions, restoring 6,461± sf of degraded area within the Riverfront Area. A detailed Riverfront Area Mitigation Plan will be submitted to the Revere Conservation Commission and MassDEP during the Notice of Intent (NOI) review process.

8.0 Conclusions

The information contained in this NOI describes the site, proposed work and the effect of said work on the interests identified in the WPA and further demonstrates that the project can be constructed in accordance with the applicable performance standards for the affected wetland resource areas. A clear limit of work line has been provided on the enclosed Permit Drawings and appropriate sedimentation and erosion control measures and other BMPs will be employed by the site contractor to avoid impacts to wetland resource areas during construction. A commitment to appropriate mitigation for work within the 25-foot Riverfront Area has been proposed. The Applicant therefore

respectfully requests that the commission issue an Order of Conditions approving the Project with appropriate conditions to protect the interests identified in M.G.L. c. 131 §40.

Attachment B: Figures

Figure 1. *USGS Map*

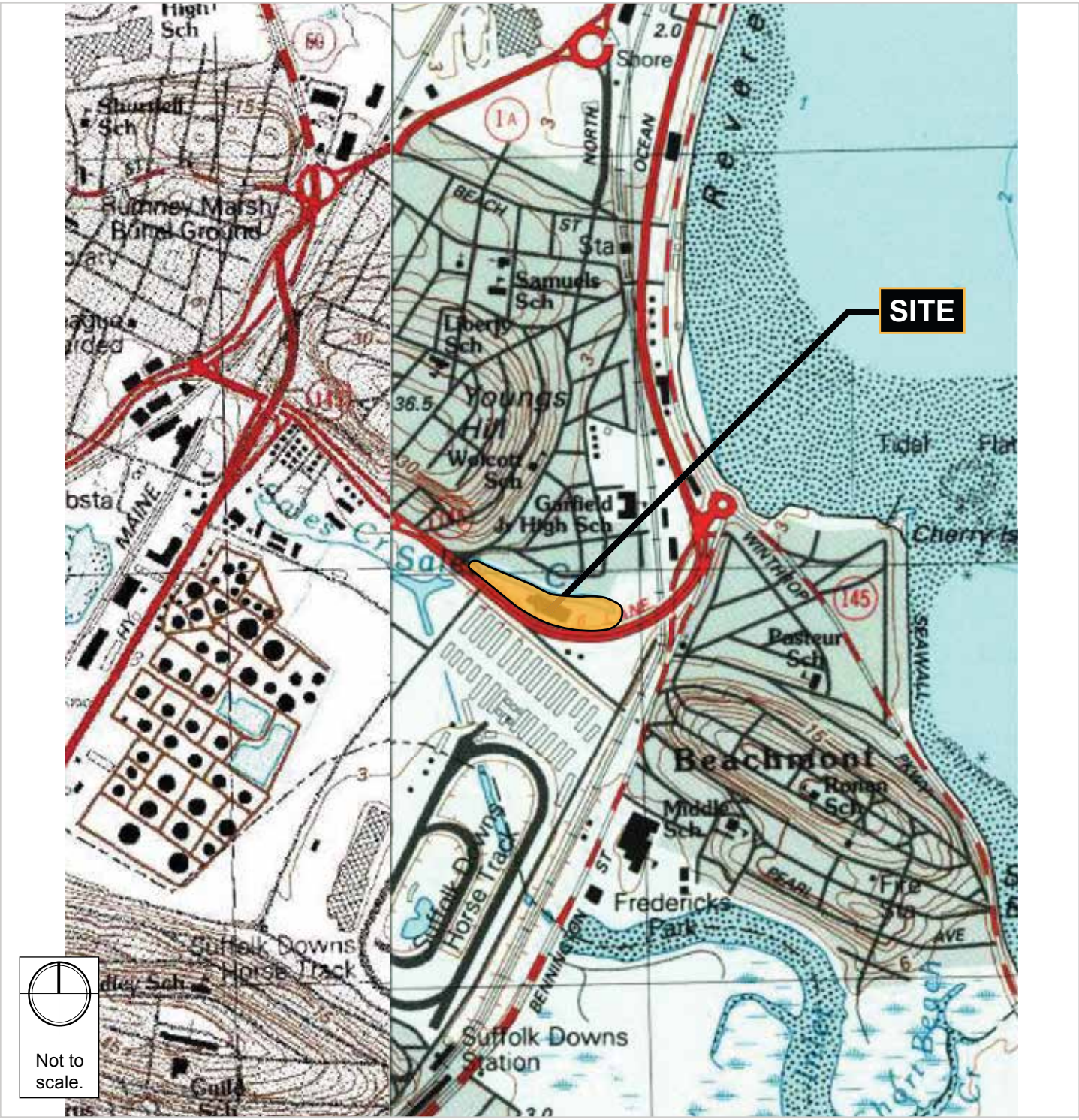

Figure 2. *Aerial Locus Map*

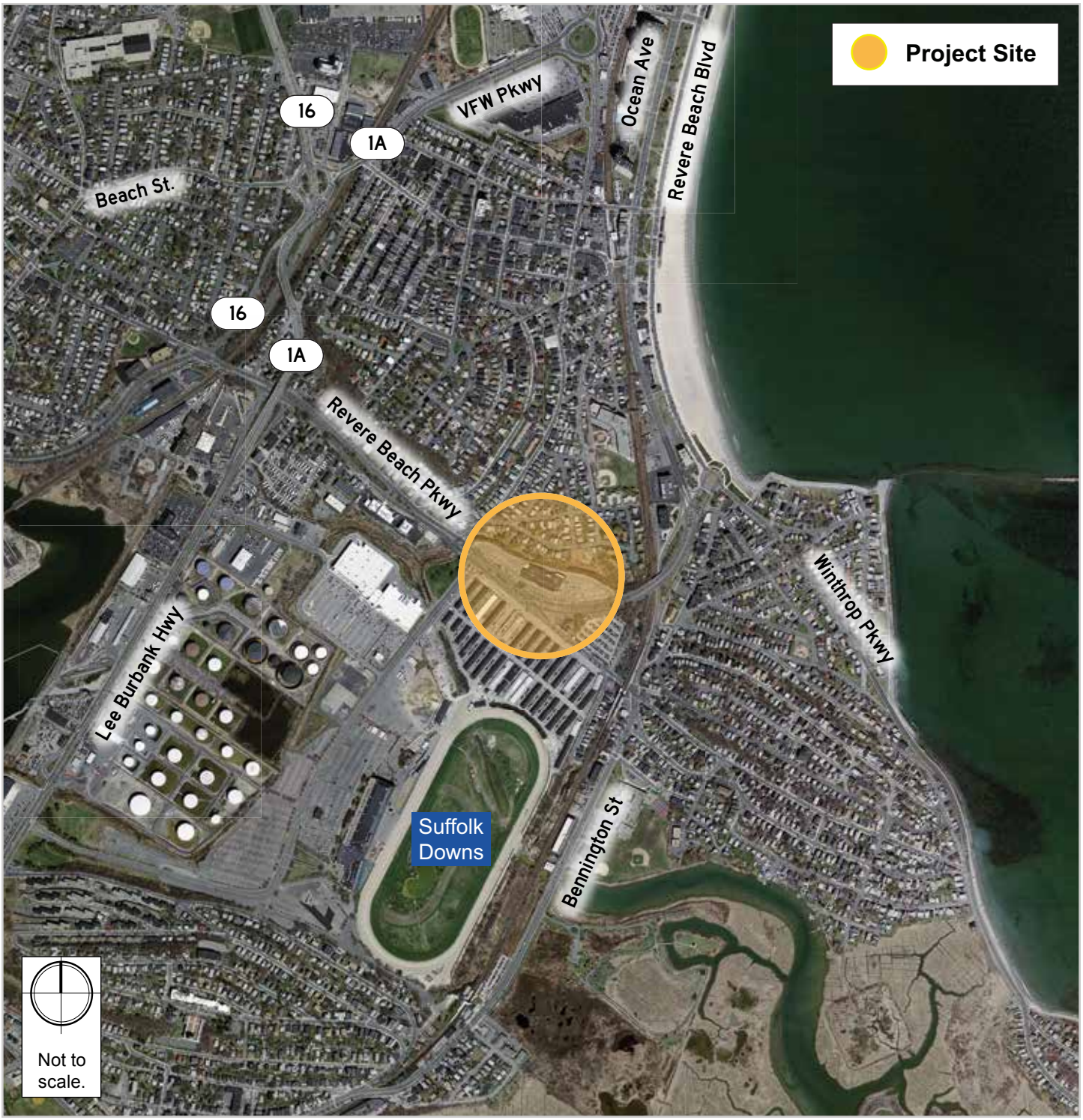

Attachment C:
Site Photographs

Photo 1. Westerly End of Site

Photo 2. Existing Building Looking East

Photo 3. Easterly End of Site

Photo 4. Westerly Headwall in Sales Creek

Photo 5. Looking Towards Sales Creek at Easterly End of Site

Photo 6. Easterly Headwall in Sales Creek

Photo 7. Typical Edge of Pavement

Photo 8. Sales Creek from Middle of the Site

Attachment D:
Filing Fee Information

Massachusetts Department of Environmental Protection
Bureau of Resource Protection - Wetlands

NOI Wetland Fee Transmittal Form

Massachusetts Wetlands Protection Act M.G.L. c. 131, §40

Important: When filling out forms on the computer, use only the tab key to move your cursor - do not use the return key.

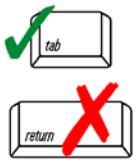

A. Applicant Information

1. Location of Project:

205 Revere Beach Parkway	Revere
a. Street Address	b. City/Town
c. Check number	d. Fee amount

2. Applicant Mailing Address:

Kyle	Warwick
a. First Name	b. Last Name

205 Revere Beach Parkway Partners, LLC c/o Gate Residential
c. Organization

265 Franklin Street, 6th Floor
d. Mailing Address

Boston	MA	02110
e. City/Town	f. State	g. Zip Code

(617) 904-7000		kyle.warwick@redgate-re.com
h. Phone Number	i. Fax Number	j. Email Address

3. Property Owner (if different):

a. First Name	b. Last Name

c. Organization

d. Mailing Address

e. City/Town	f. State	g. Zip Code

h. Phone Number	i. Fax Number	j. Email Address

To calculate filing fees, refer to the category fee list and examples in the instructions for filling out WPA Form 3 (Notice of Intent).

B. Fees

Fee should be calculated using the following process & worksheet. ***Please see Instructions before filling out worksheet.***

Step 1/Type of Activity: Describe each type of activity that will occur in wetland resource area and buffer zone.

Step 2/Number of Activities: Identify the number of each type of activity.

Step 3/Individual Activity Fee: Identify each activity fee from the six project categories listed in the instructions.

Step 4/Subtotal Activity Fee: Multiply the number of activities (identified in Step 2) times the fee per category (identified in Step 3) to reach a subtotal fee amount. Note: If any of these activities are in a Riverfront Area in addition to another Resource Area or the Buffer Zone, the fee per activity should be multiplied by 1.5 and then added to the subtotal amount.

Step 5/Total Project Fee: Determine the total project fee by adding the subtotal amounts from Step 4.

Step 6/Fee Payments: To calculate the state share of the fee, divide the total fee in half and subtract $12.50. To calculate the city/town share of the fee, divide the total fee in half and add $12.50.

Massachusetts Department of Environmental Protection
Bureau of Resource Protection - Wetlands

NOI Wetland Fee Transmittal Form

Massachusetts Wetlands Protection Act M.G.L. c. 131, §40

B. Fees (continued)

Step 1/Type of Activity	Step 2/Number of Activities	Step 3/Individual Activity Fee	Step 4/Subtotal Activity Fee
3b.) Each building (for development) including site	2	$1,050	$2,100
50% of fee for work within Riverfront Area			$1,050

Step 5/Total Project Fee: $3,150

Step 6/Fee Payments:

Total Project Fee:	$3,150 a. Total Fee from Step 5
State share of filing Fee:	$1,562.50 b. 1/2 Total Fee **less $**12.50
City/Town share of filling Fee:	$1,587.50 c. 1/2 Total Fee **plus** $12.50

C. Submittal Requirements

a.) Complete pages 1 and 2 and send with a check or money order for the state share of the fee, payable to the Commonwealth of Massachusetts.

Department of Environmental Protection
Box 4062
Boston, MA 02211

b.) **To the Conservation Commission:** Send the Notice of Intent or Abbreviated Notice of Intent; a **copy** of this form; and the city/town fee payment.

To MassDEP Regional Office (see Instructions): Send a copy of the Notice of Intent or Abbreviated Notice of Intent; a **copy** of this form; and a **copy** of the state fee payment. (E-filers of Notices of Intent may submit these electronically.)

FIRST REPUBLIC BANK
BOSTON, MA 02110
FOR WIRES & ACH TRANSFERS
USE ROUTING 321081669

1983

54-7500/2114
66

CHECK ARMOR FRAUD PROTECTION

REDGATE REAL ESTATE ADVISORS, LLC
265 FRANKLIN STREET
6TH FLOOR
BOSTON, MA 02110

12/20/2016

PAY TO THE ORDER OF Commonwealth of Massachusetts $ **1,562.50

One Thousand Five Hundred Sixty-Two and 50/100**********

DOLLARS

Commonwealth of Massachusetts

MEMO
NOI Wetland Fee 205 RBP

AUTHORIZED SIGNATURE

MP

Details on Back.

Security Features Included

⑈001983⑈ ⑆211475000⑆ 8000176720 2⑈

FIRST REPUBLIC BANK
BOSTON, MA 02110
FOR WIRES & ACH TRANSFERS
USE ROUTING 321081669

1982

54-7500/2114
66

CHECK ARMOR FRAUD PROTECTION

REDGATE REAL ESTATE ADVISORS, LLC
265 FRANKLIN STREET
6TH FLOOR
BOSTON, MA 02110

12/20/2016

PAY TO THE ORDER OF City of Revere $ **1,587.50

One Thousand Five Hundred Eighty-Seven and 50/100**********

DOLLARS

City of Revere

MEMO
NOI Wetland Fee 205 RBP

AUTHORIZED SIGNATURE

MP

Details on Back.

Security Features Included

⑈001982⑈ ⑆211475000⑆ 8000176720 2⑈

Attachment E:
Wetland Delineation Report

HOWARD STEIN HUDSON

Engineers + Planners

Observation Plot Number: Wetland
Transect Number: 1

Vegetated Wetland Delineation Field Data Form

Company: **RJI Associates** Prepared by: **Robert Ingram** Project Location: **205 Revere Beach Parkway** DEP File #: _____

Check all that apply:

- ☐ Vegetation alone presumed adequate to delineate BVW boundary: fill out Section I only
- ☑ Vegetation and other indicators of hydrology used to delineate BVW boundary: fill out Sections I and II
- ☐ Method other than dominance test used (attach additional information)

Section I. Vegetation Observation Plot Number: **Upland** Transect Number: **2** Date of Delineation: **06/14/15**

A. Sample Layer and Plant Species (by common/scientific name)	B. Percent Cover (or basal area)	C. Percent Dominance	D. Dominant Plant (yes or no)	E. Wetland Indicator Category*
Trees:				
Red maple (*Acer rubrum*)	85.0%	90.0%	YES	FAC*
Norway maple (*Acer platanoides*)	35%	50%	YES	UPL
Saplings:				
Red maple (*Acer rubrum*)	30.0%	20%	YES	FAC*
Shrubs:				
N/A				
Ground Cover:				
Poison ivy (*Toxicodendron radicans*)	15.0%	25%	YES	FAC*
Golden Bamboo (*Phyllostachys aurea*)	85%	90%	YES	UPL
Climbing Woody Vines:				

* Use an asterisk to mark indicator plants: plant species listed in the wetlands Protection Act (MGL c.131, s.40); plants in the genus *Sphagnum*; plants listed as FAC, FAC+, FACW-, FACW, FACW+, or OBL; or plants with physiological or morphological adaptations. If any plants are identified as wetland indicator plants due to physiological or morphological adaptations, describe the adaptation next to the asterisk.

Vegetation conclusion:

Number of dominant wetland indicator plants: 0 **Number of non-wetland indicator plants: 5**

Is the number of dominant wetland plants equal to or greater than the number of dominant non-wetland plants: yes ☐ no ☑

If vegetation alone is presumed adequate to delineate the BVW boundary, submit this form with the Request for Determination of Applicability or Notice of Intent.

Observation Plot Number: Wetland
Transect Number: 1

Section II. Indicators of Hydrology

Hydric Soil Interpretation

1. Soil Survey

Is there a published soil survey for this site? Yes ☑ no ☐

title/date:

map number**:**

soil type mapped:

hydric soil inclusions: **No**

Are field observations consistent with soil survey? Yes ☐ no ☑
Remarks:
Based on research for the property the site is composed of historic fills. Due to the location of developed areas and roadways, the area contains predominantly fill material. No mottling was present.

2. Soil Description

Horizon	Depth	Matrix Color	Mottles Color
O	**0-24"**	**NA**	

Remarks:
This soil has a deep layer of fill material. Surface water has a larger influence in the area than groundwater.

3. Other:

Conclusion: Is soil hydric? Yes ☐ No ☑

Other Indicators of Hydrology: (check all that apply and describe)

☐ Site inundated: _____

☐ Depth to free water in observation hole: _____

☐ Depth to soil saturation in observation hole: _____

☐ Water marks: _____

☐ Drift lines: _____

☐ Sediment deposits: _____

☐ Drainage patterns in BVW: _____

☐ Oxidized rhizospheres: _____

☐ Water-stained leaves: _____

☐ Recorded data (stream, lake, or tidal gauge; aerial photo; other):

_____

☐ Other: _____

Vegetation and Hydrology Conclusion

	yes	no
Number of wetland indicator plants greater than or equal to number of non-wetland indicator plants	☐	☑
Wetland hydrology present:		
hydric soil present	☐	☑
other indicators of hydrology present	☐	☑
Sample location is in BVW	☐	☑

Submit this form with the Request for Determination of Applicability or Notice of Intent.

Observation Plot Number: Wetland
Transect Number: 1

Vegetated Wetland Delineation Field Data Form

Company: **RJI Associates** Prepared by: **Robert Ingram** Project Location: **205 Revere Beach Parkway** DEP File #: _____

Check all that apply:

- ☐ Vegetation alone presumed adequate to delineate BVW boundary: fill out Section I only
- ☑ Vegetation and other indicators of hydrology used to delineate BVW boundary: fill out Sections I and II
- ☐ Method other than dominance test used (attach additional information)

Section I. Vegetation Observation Plot Number: **Wetland** Transect Number: **1** Date of Delineation: **06/14/15**

A. Sample Layer and Plant Species (by common/scientific name)	B. Percent Cover (or basal area)	C. Percent Dominance	D. Dominant Plant (yes or no)	E. Wetland Indicator Category*
Trees:				
Red maple (*Acer rubrum*)	63.0%	75.0%	YES	FAC*
Sassafras	10%	5%	NO	FACU
Saplings:				
Red maple (*Acer rubrum*)	38.0%	78.4%	YES	FAC*
Shrubs:				
N/A				
Ground Cover:				
Phragmites	10.5%	77.8%	YES	FACW*
Poison ivy (*Toxicodendron radicans*)	3.0%	22.2%	YES	FAC*
Golden Bamboo *(Phyllostachys aurea)*	45%	30%	YES	UPL
Wild Carrot (*Daucus carota*)	15%	10%	NO	UPL
Climbing Woody Vines:				
Oriental bitter-sweet (*Celastrus orbiculata*)	5.0%	20.0%	NO	UPL

* Use an asterisk to mark indicator plants: plant species listed in the wetlands Protection Act (MGL c.131, s.40); plants in the genus *Sphagnum*; plants listed as FAC, FAC+, FACW-, FACW, FACW+, or OBL; or plants with physiological or morphological adaptations. If any plants are identified as wetland indicator plants due to physiological or morphological adaptations, describe the adaptation next to the asterisk.

Vegetation conclusion:

Number of dominant wetland indicator plants: 5 **Number of non-wetland indicator plants: 3**

Is the number of dominant wetland plants equal to or greater than the number of dominant non-wetland plants: yes ☑ no ☐

If vegetation alone is presumed adequate to delineate the BVW boundary, submit this form with the Request for Determination of Applicability or Notice of Intent.

Observation Plot Number: Wetland
Transect Number: 1

Section II. Indicators of Hydrology

Hydric Soil Interpretation

1. Soil Survey

Is there a published soil survey for this site? Yes ☑ no ☐

title/date:

map number**:**

soil type mapped:

hydric soil inclusions: **No**

Are field observations consistent with soil survey? Yes ☐ no ☑

Remarks:
Based on research for the property the site is and are of historic fills. Due to the location of developed areas and roadways, the area contains predominantly fill material with mottling present consistent with tidal flood elevations.

2. Soil Description

Horizon	Depth	Matrix Color	Mottles Color
O	**0-10"**	**10YR2/1**	
B	**10-22+"**	**10YR3/3**	**Depletions Present**

Remarks:
This soil has a deep layer of fill material. Surface water has a larger influence in the area than groundwater.

3. Other:
Due to the dominant fill material and lack of a depleted layer below the organic, surface water appears to inundate long enough to develop anaerobic conditions.

Conclusion: Is soil hydric? Yes ☑ no ☐

Other Indicators of Hydrology: (check all that apply and describe)

☑ Site inundated: **Yes, daily**

☐ Depth to free water in observation hole: _____

☐ Depth to soil saturation in observation hole: _____

☑ Water marks: _____

☑ Drift lines: **Rack Lines**

☑ Sediment deposits: _____

☐ Drainage patterns in BVW: _____

☐ Oxidized rhizospheres: _____

☑ Water-stained leaves: _____

☑ Recorded data (stream, lake, or tidal gauge; aerial photo; other):

☐ Other: _____

Vegetation and Hydrology Conclusion

	yes	no
Number of wetland indicator plants greater than or equal to number of non-wetland indicator plants	☑	☐
Wetland hydrology present:		
hydric soil present	☑	☐
other indicators of hydrology present	☑	☐
Sample location is in BVW	☑	☐

Submit this form with the Request for Determination of Applicability or Notice of Intent.

Attachment F:
Abutter Notification Information

AFFIDAVIT OF SERVICE
FOR ABUTTER NOTIFICATION

Under the Massachusetts Wetlands Protection Act

(To be submitted to the Massachusetts Department of Environmental Protection)

I, Richard E. Latini, P.E., on behalf of 205 Revere Beach Parkway Partners, LLC, hereby certify under the pains and penalties of perjury that on December 22, 2016, I gave Notification to abutters in compliance with second paragraph of Massachusetts General Laws Chapter 131, Section 40 and the DEP Guide to Abutter Notification dated April 8, 1994 in connection with the following matter:

> A Notice of Intent filed under the Massachusetts Wetlands Protection Act and City of Revere Code or Ordinances, Title 16-Environment, Chapter 16.04 Wetlands Protection by 205 Revere Beach Parkway Partners, LLC with the Revere Conservation Commission on December 22, 2016 for the property located at 205 Revere Beach Parkway in Revere, MA .

The Abutter Notification Letter and the list of abutters to whom it was given and their addresses are attached to this Affidavit of Service.

Richard E. Latini, P.E.

12/22/16
Date

Notification to Abutters
Under the Massachusetts Wetlands Protection Act and the
City of Revere's Wetlands Ordinance

In accordance with the second paragraph of Massachusetts General Laws Chapter 131, Section 40 and the City of Revere's Wetlands Ordinance, you are hereby notified of the following:

A. The name of the Applicant is **205 Revere Beach Parkway Partners, LLC**

B. The Applicant has filed a **Notice of Intent** with the Revere Conservation Commission seeking permission to remove, fill, dredge, or alter an Area Subject to Protection under the Wetlands Protection Act (General Laws Chapter 131, Section 40) and the City of Revere's Wetlands Ordinance.

C. The address of the lot where the activity is proposed is **205 Revere Beach Parkway**

D. The Project includes the construction of a 132-key hotel with 8 covered parking spaces, and a 195-unit residential building with 59 garage spaces. 231 additional spaces will be provided in a surface parking area.

E. A **Public Hearing** will be held on Wednesday, January 4, 2017 at 7:00 P.M. in the City Council Chambers, Revere City Hall 281 Broadway, Revere, MA 02151.

F. Copies of the Notice of Intent may be examined at the Revere Conservation Commission between the hours of 8:15 A.M. to 5:00 P.M. Monday through Thursday, and from 8:15 A.M. to 12:15 P.M. on Fridays and will also be available in PDF format on the Revere Conservation Commission's website at *www.revere.org/departments/conservation-commission/meetingagendas*

G. Copies of the Notice of Intent may be obtained from The Applicant's representative by calling (617) 482-7080 between the hours of 9:00 A.M. to 5:00 P.M. Monday through Friday.

NOTE: Public Hearing Notice, including its date, time and place, will be published at least 5 days in advance of the first hearing only in the Revere Journal.

NOTE: You may also contact the Revere Conservation Commission or the Department of Environmental Protection (DEP) Northeast Regional Office at (978) 694-3200 for more information about this application or the Wetlands Protection Act.

Loc: 2 OCEAN AVE Parcel ID #: 2-139-10
LUC: 112

WAKEFIELD INVESTMENT CORP

POST OFFICE BOX 540

WAKEFIELD MA 01880

Loc: RAILROAD LOCATIO Parcel ID #: 2-139-11
LUC: 920

MASS BAY TRANS AUTHORITY

10 PARK PLAZA

BOSTON MA 02116

Loc: 221 GARFIELD AVE Parcel ID #: 4-101-5
LUC: 101

CAJOLET ANDRE
JESSIE A CAJOLET
221 GARFIELD AVE

REVERE MA 02151

Loc: 70 STANDISH RD Parcel ID #: 4-101-6
LUC: 101

ZOULALIAN FAMILY TRUST
GEORGE P ZOULALIA, TRUSTEE
258 CHESTNUT AVE

BOSTON MA 02130

Loc: 60 STANDISH RD Parcel ID #: 4-101-7
LUC: 101

ZOULALIAN SHARKEY

258 CHESTNUT AVE

JAMAICA PLAIN MA 02130-4404

Loc: NORTH SHORE RD Parcel ID #: 4-103-1
LUC: 920

COMMONWEALTH OF MASSACHUSETTS

20 SOMERSET ST

BOSTON MA 02108

Loc: 9 STANDISH RD Parcel ID #: 4-103-10
LUC: 104

HAYEK MALAZ

9 STANDISH RD

REVERE MA 02151

THIS IS A TRUE & ATTESTED
COPY OF THE RECORDS OF THE
ASSESSOR'S OFFICE OF THE
CITY OF REVERE

DATE: 12/12/16

Loc: 15 STANDISH RD Parcel ID #: 4-103-11
LUC: 104

REARDON MC

15 STANDISH RD

REVERE MA 02151

Loc: 19 STANDISH RD Parcel ID #: 4-103-12
LUC: 101

MORRIS MORRIS D
MORRIS RUTH
19 STANDISH RD

REVERE MA 02151

Loc: STANDISH RD Parcel ID #: 4-103-13
LUC: 132

CRUZ MIGUEL A

25 STANDISH RD

Revere MA 02151

Loc: 25 STANDISH RD Parcel ID #: 4-103-14
LUC: 101

CRUZ MIGUEL A

25 STANDISH RD

Revere MA 02151

Loc: 27 STANDISH RD Parcel ID #: 4-103-15
LUC: 101

BOSTROM RICHARD
DIANE J BOSTROM
27 STANDISH RD

REVERE MA 02151

Loc: 29 STANDISH RD Parcel ID #: 4-103-16
LUC: 101

MISTRI ASHOK
REKHA MISTRI
29 STANDISH RD

REVERE MA 02151

Loc: 31 STANDISH RD 31 Parcel ID #: 4-103-17A-31
LUC: 102

FLORES LINA L

31 STANDISH RD

REVERE MA 02151

Loc: 31A STANDISH RD 31A Parcel ID #: 4-103-17A-31A
LUC: 102

LAURENZA VERONICA
JOSEPH A LAURENZA
31A STANDISH RD

REVERE MA 02151

Loc: 33 STANDISH RD 33 Parcel ID #: 4-103-19A-33
LUC: 102

TURANO JOHN

33 STANDISH RD

REVERE MA 02151

Loc: 33A STANDISH RD 33A Parcel ID #: 4-103-19A-33A
LUC: 102

WILLIAMS BRANDON

33A STANDISH RD

REVERE MA 02151

Loc: NORTH SHORE RD Parcel ID #: 4-103-2
LUC: 930

CITY OF REVERE
C/O MAYOR'S OFFICE
281 BROADWAY

REVERE MA 02151

Loc: 35 STANDISH RD Parcel ID #: 4-103-20
LUC: 104

US BANK TRUST NA

13801 WIRELESS WAY

OKLAHOMA CITY OK 73134

Loc: STANDISH RD Parcel ID #: 4-103-21
LUC: 131

BOSEK JERZY

7 HOMELAND CIR

SAUGUS MA 01906

Loc: STANDISH RD Parcel ID #: 4-103-22
LUC: 132

STANDISH ROAD NOMINEEE TRUST
CARMINE MARTIGNETTI TRUSTEE
8 LINCOLN RD

MEDFORD MA 02155

Loc: STANDISH RD Parcel ID #: 4-103-23
LUC: 130

STANDISH ROAD NOMINEE TRUST
CARMINE MARTIGNETTI TRUSTEE
8 LINCOLN RD

MEDFORD MA 02155

Loc: 67 STANDISH RD Parcel ID #: 4-103-24
LUC: 131

STANDISH ROAD NOMINEE TRUST
CARMINE MARTIGNETTI TRUSTEE
8 LINCOLN RD

MEDFORD MA 02155

Loc: STANDISH RD Parcel ID #: 4-103-25
LUC: 131

STANDISH ROAD NOMINEE TRUST
CARMINE MARTIGNETTI TRUSTEE
8 LINCOLN RD

MEDFORD MA 02155

Loc: 75 STANDISH RD Parcel ID #: 4-103-26
LUC: 101

FRANK LONGO FAMILY IRREVOCABLE
LONGO FRANK S TRUSTEE
75 STANDISH RD

REVERE MA 02151

Loc: 81 STANDISH RD Parcel ID #: 4-103-27
LUC: 101

MORRISON STEPHEN
JANICE M MORRISON
81 STANDISH RD

REVERE MA 02151

Loc: 85 STANDISH RD 1 Parcel ID #: 4-103-28A-1
LUC: 102

EVERETT RICHARD
WILLIAM P HACKETT JR
85 STANDISH RD

REVERE MA 02151

Loc: 87 STANDISH RD 2 Parcel ID #: 4-103-28A-2
LUC: 102

FRANCISCO SIDNEI
FERREIRA ANA
87 STANDISH RD
UNIT L
REVERE MA 02151

THIS IS A TRUE & ATTESTED
COPY OF THE RECORDS OF THE
ASSESSOR'S OFFICE OF THE
CITY OF REVERE
DATE: 12/12/16

Loc: 89 STANDISH RD 3 Parcel ID #: 4-103-28A-3
LUC: 102

OTERI ANTHONY
ANTONETTA OTERI
89 STANDISH RD

REVERE MA 02151

Loc: 91 STANDISH RD 4 Parcel ID #: 4-103-28A-4
LUC: 102

CONSTANTINO ANTHONY J.
CONSTANTINO ELIZABETH K.
91 STANDISH RD

REVERE MA 02151

Loc: 39 PORTER AVE 1 Parcel ID #: 4-103-29A-1
LUC: 102

MARKU ZEF
MARKU KRISTINA
39 PORTER AVE
UNIT O
REVERE MA 02151

Loc: 41 PORTER AVE 2 Parcel ID #: 4-103-29A-2
LUC: 102

WINER GEORGE
LYNDA M WINER
41 PORTER AVE

REVERE MA 02151

Loc: 43 PORTER AVE 3 Parcel ID #: 4-103-29A-3
LUC: 102

HAMMOUOUALI NAJIA

43 PORTER AVE
UNIT Q
Revere MA 02151

Loc: 45 PORTER AVE 4 Parcel ID #: 4-103-29A-4
LUC: 102

SIGAL ALLA
SIGAL ARKADY
45 PORTER AVE
UNIT R
REVERE MA 02151

Loc: 47 PORTER AVE 5 Parcel ID #: 4-103-29A-5
LUC: 102

FEDERICO ANTHONY
DOREEN M FEDERICO
47 PORTER AVE

REVERE MA 02151

Loc: 49 PORTER AVE 6 Parcel ID #: 4-103-29A-6
LUC: 102

CHIANGO SANDRA
KAREN SANTOS
49 PORTER AVE

REVERE MA 02151

Loc: ELIOT RD Parcel ID #: 4-103-3
LUC: 131

CAVANAUGH MARGARET

21 NORTH HILL DR

LYNNFIELD MA 01940

Loc: 50 PORTER AVE 1 Parcel ID #: 4-103-30A-1
LUC: 102

VELEZ DAISY
HERNANDEZ DRIANALEE
50 PORTER AVE
UNIT Y
REVERE MA 02151

Loc: 54 PORTER AVE 2 Parcel ID #: 4-103-30A-2
LUC: 102

GONZALEZ DAVID D
GONZALEZ ARMANDO
54 PORTER AVE
UNIT Z
Revere MA 02151

Loc: 42 PORTER AVE 1 Parcel ID #: 4-103-31A-1
LUC: 102

MCCUE JR RAYMOND D

42 PORTER AVE
UNIT W
REVERE MA 02151

Loc: 46 PORTER AVE 2 Parcel ID #: 4-103-31A-2
LUC: 102

CAPARELLA SANDRA
STEPHEN A CAPARELLA
46 PORTER AVE

REVERE MA 02151

Loc: 7 ELIOT RD Parcel ID #: 4-103-4
LUC: 104

CAVANAUGH MARGARET

21 NORTH HILL DR

LYNNFIELD MA 01940

THIS IS A TRUE & ATTESTED
COPY OF THE RECORDS OF THE
ASSESSOR'S OFFICE OF THE
CITY OF REVERE
DATE: 9/12/16

Loc: 9 ELIOT RD Parcel ID #: 4-103-5
LUC: 104

REED ROBERT
BOBBIE JO REED
3 ELIOT RD

REVERE MA 02151

Loc: 15 ELIOT RD Parcel ID #: 4-103-6
LUC: 104

BORDEN ALANA M

15 ELIOT RD

Revere MA 02151

Loc: 19 ELIOT RD Parcel ID #: 4-103-7
LUC: 104

HENRIQUEZ DORA

19 ELIOT RD

REVERE MA 02151

Loc: 21 ELIOT RD Parcel ID #: 4-103-8
LUC: 105

ELIOT ROAD REALTY TRUST
HELEN F ODONNELL
24 ROBERT RD

REVERE MA 02151

Loc: 5 STANDISH RD Parcel ID #: 4-103-9
LUC: 104

VASQUEZ ANA V
CHINCHILLA GLORIA N VASQUEZ
5 STANDISH RD

REVERE MA 02151

Loc: RAILROAD LOCATIO Parcel ID #: 4-139-13
LUC: 920

COMMONWEALTH OF MASSACHUSETTS

20 SOMERSET ST

BOSTON MA 02108

Loc: REVERE BEACH PKWY Parcel ID #: 4-90-1
LUC: 920

COMMONWEALTH OF MASSACHUSETTS

20 SOMERSET ST

BOSTON MA 02108

Loc: REVERE BEACH PKWY Parcel ID #: 4-90-2
LUC: 131

FERRAGAMO PAUL

8 SPOUTING HORN RD

NAHANT MA 01908

Loc: 205 REVERE BEACH PKWY Parcel ID #: 4-90-3
LUC: 324

205 REVERE BEACH PARKWAY
PARTNERS, LLC
265 FRANKLIN ST
6TH FLR
BOSTON MA 02110

Loc: 80 STANDISH RD 1 Parcel ID #: 4-91-9A-1
LUC: 102

DAVID JOSE A

80 STANDISH RD
UNIT A
REVERE MA 02151

Loc: 27 PORTER AVE 10 Parcel ID #: 4-91-9A-10
LUC: 102

27 PORTER TRUST
CHRISTINE PISTONE TRUSTEE
27 PORTER AVE

REVERE MA 02151

Loc: 82 STANDISH RD 2 Parcel ID #: 4-91-9A-2
LUC: 102

DIDOMENICO PHILIP

82 STANDISH RD

REVERE MA 02151

Loc: 84 STANDISH RD 3 Parcel ID #: 4-91-9A-3
LUC: 102

SHAUGHNESSY MICHAEL
JEANINE L SHAUGHNESSY
84 STANDISH RD

REVERE MA 02151

Loc: 86 STANDISH RD 4 Parcel ID #: 4-91-9A-4
LUC: 102

BOSEK JERZY

7 HOMELAND CIRCLE

SAUGUS MA 01906

THIS IS A TRUE & ATTESTED
COPY OF THE RECORDS OF THE
ASSESSOR'S OFFICE OF THE
CITY OF REVERE
DATE: 12/12/16

Loc: 88 STANDISH RD 5 Parcel ID #: 4-91-9A-5

LUC: 102

CHICCIO REALTY TRUST
OTERI ANTONETTA C TRUSTEE
88 STANDISH RD
UNIT 5
REVERE MA 02151

Loc: 90 STANDISH RD 6 Parcel ID #: 4-91-9A-6

LUC: 102

FRONGILLO LOUIS
STEPHEN M STEINER
90 STANDISH RD
UNIT F
REVERE MA 02151

Loc: 21 PORTER AVE 7 Parcel ID #: 4-91-9A-7

LUC: 102

ADREANI RICHARD
MYRNA ADREANI
21 PORTER AVE

REVERE MA 02151

Loc: 23 PORTER AVE 8 Parcel ID #: 4-91-9A-8

LUC: 102

FROIO ROBERT
FROIO LINDA
23 PORTER AVE

REVERE MA 02151

Loc: 25 PORTER AVE 9 Parcel ID #: 4-91-9A-9

LUC: 102

PINKHAM ROBERT

25 PORTER AVE

REVERE MA 02151

Loc: REVERE BEACH PKWY Parcel ID #: 7-122A-14

LUC: 920

COMMONWEALTH OF MASSACHUSETTS

20 SOMERSET ST

BOSTON MA 02108

THIS IS A TRUE & ATTESTED
COPY OF THE RECORDS OF THE
ASSESSOR'S OFFICE OF THE
CITY OF REVERE

DATE: 12/12/16

Attachment G:
Wetland Resources Plans

Figure ENV *Environmental Constraints Key Plan*

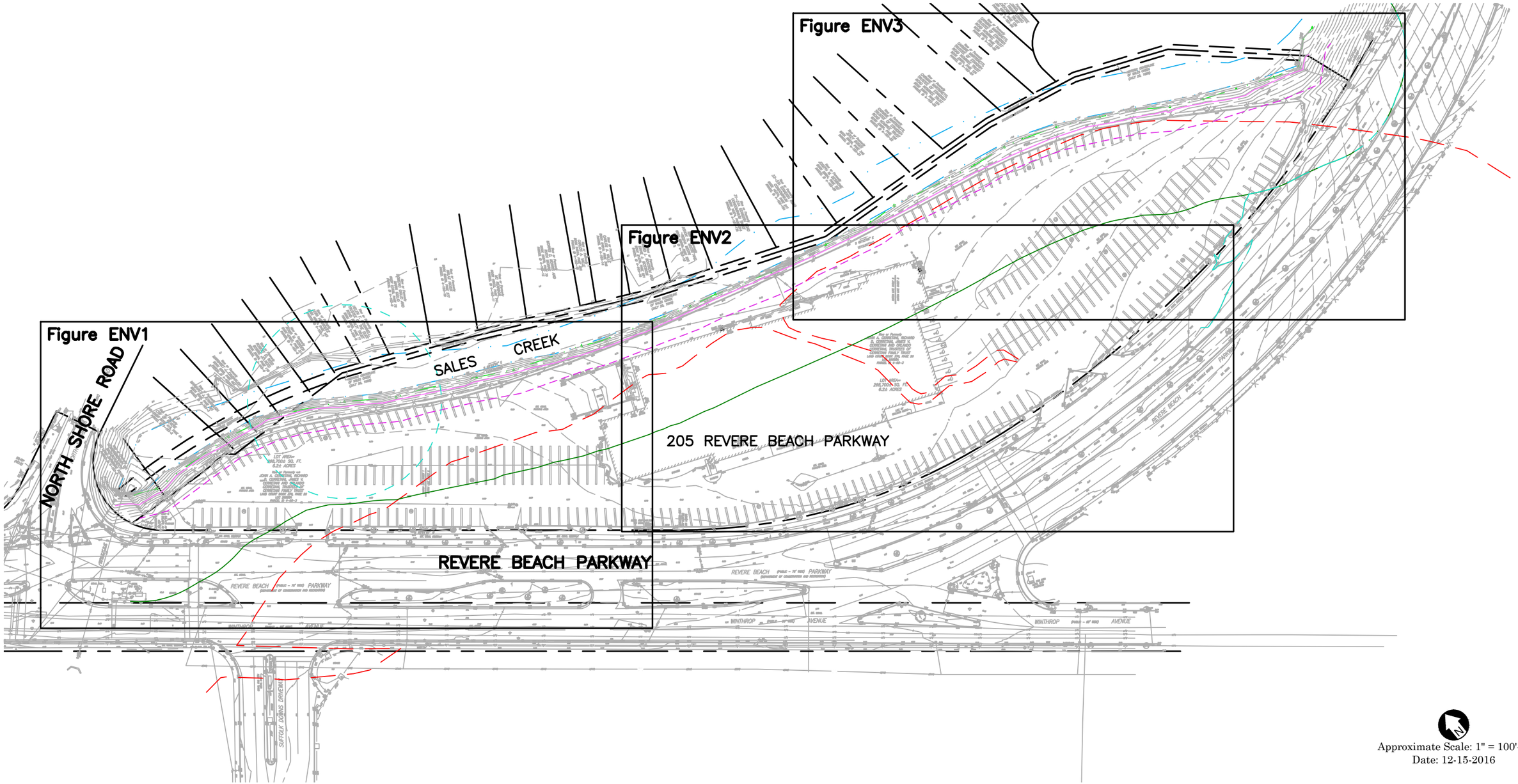

Approximate Scale: 1" = 100'-0"
Date: 12-15-2016

Figure ENV1 *Environmental Constraints Plan*

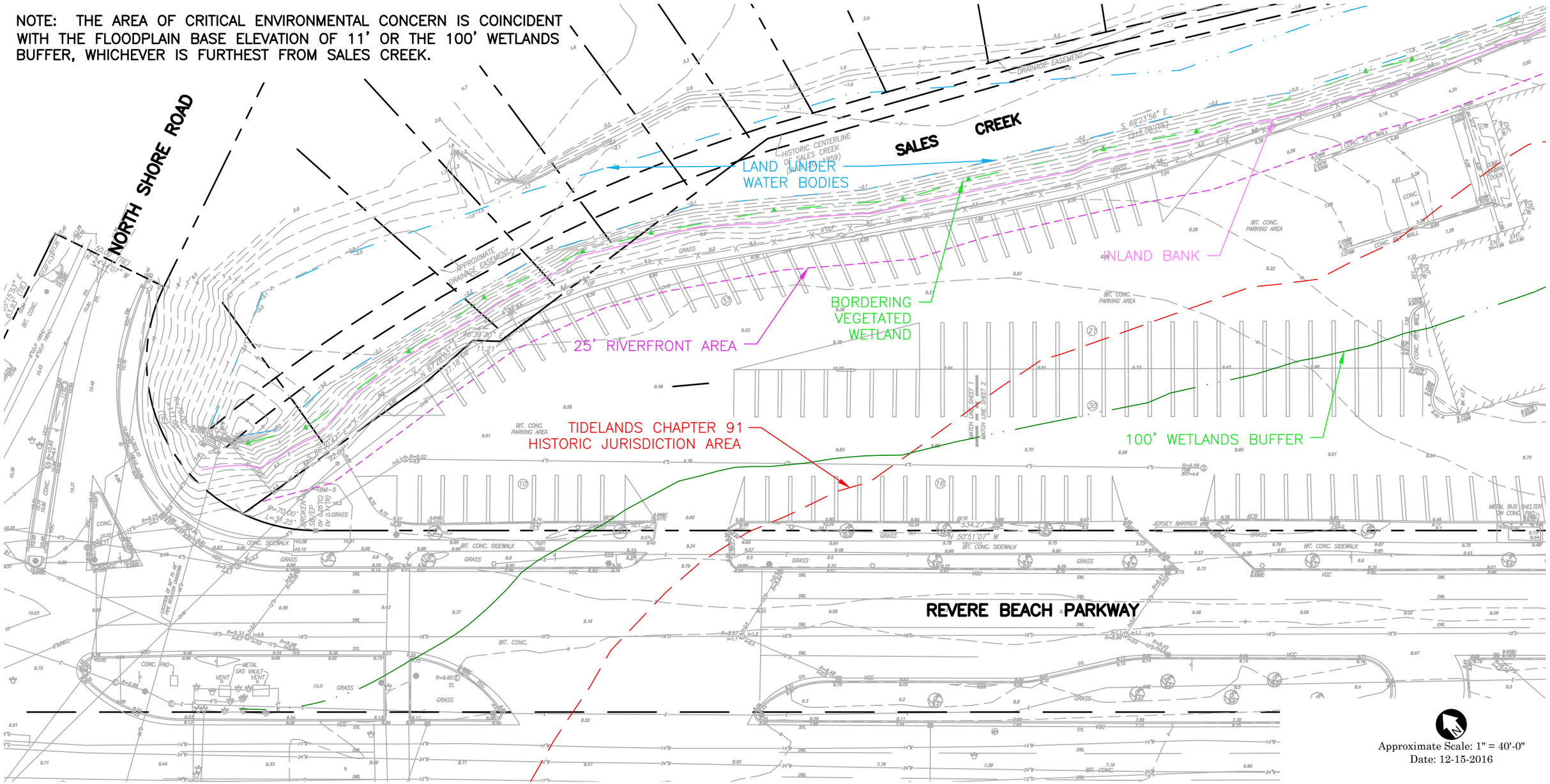

Figure ENV2 *Environmental Constraints Plan*

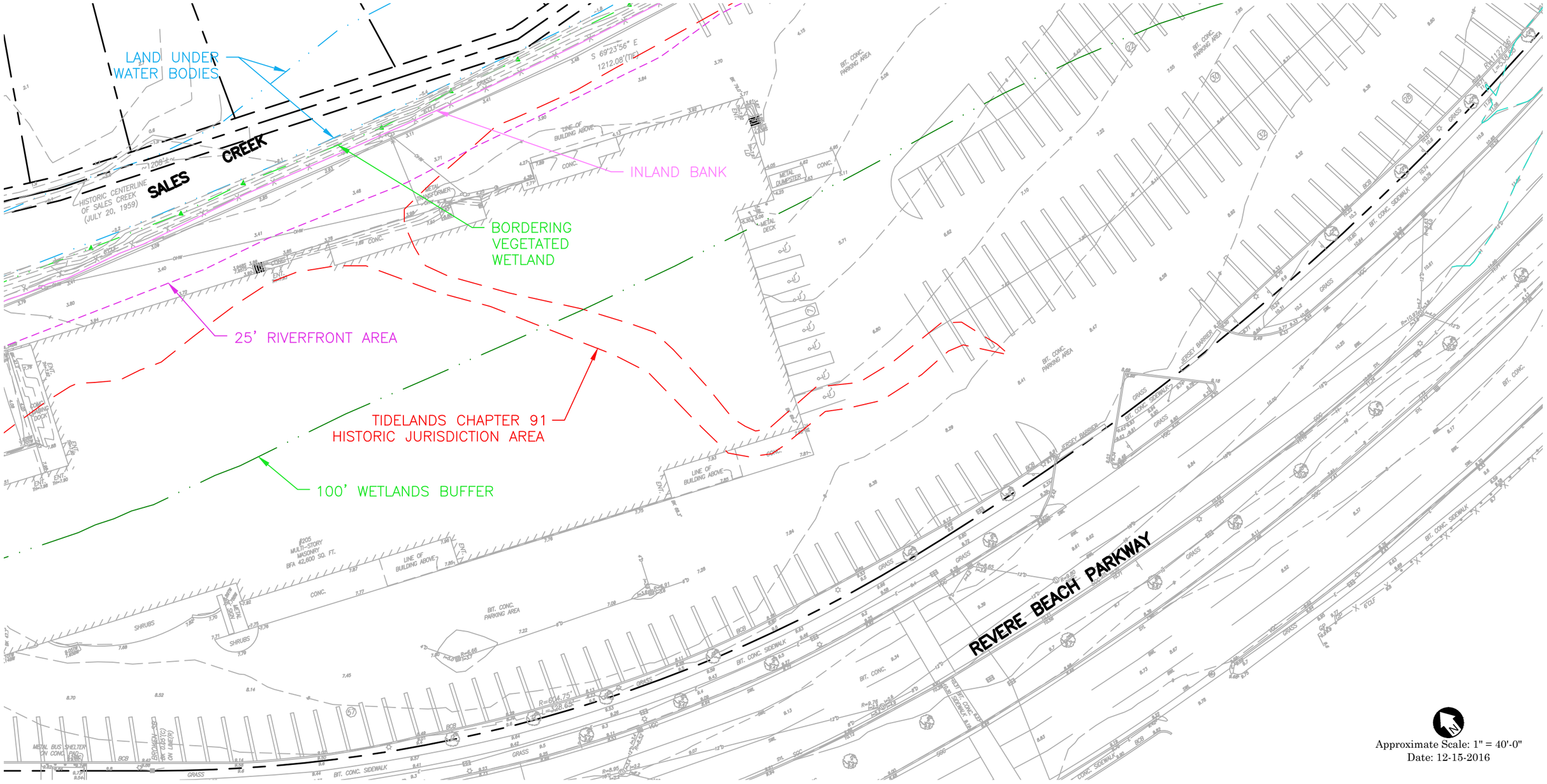

Approximate Scale: 1" = 40'-0"
Date: 12-15-2016

Figure ENV3 *Environmental Constraints Plan*

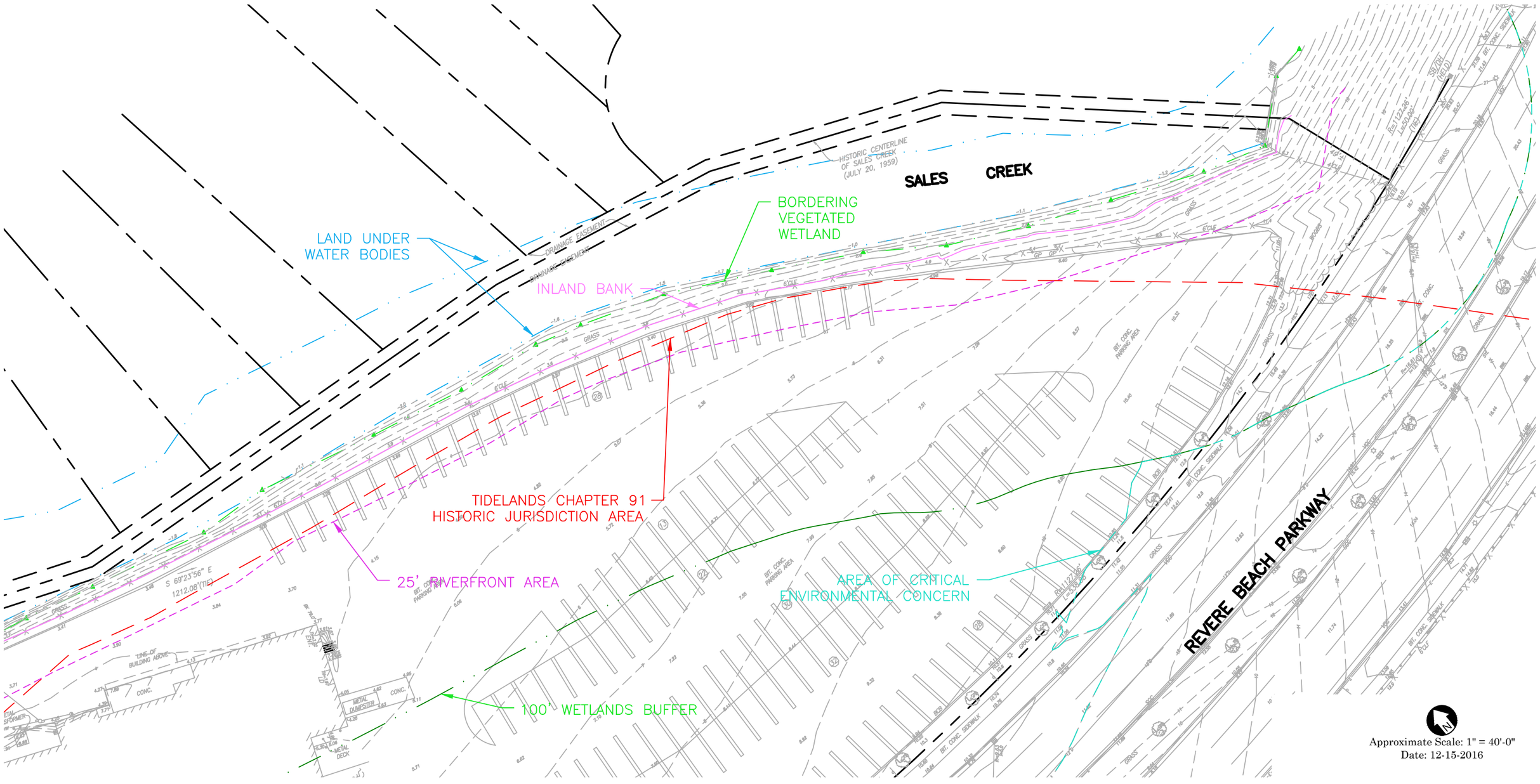

Attachment H:
Wetland Resources Impact Plans

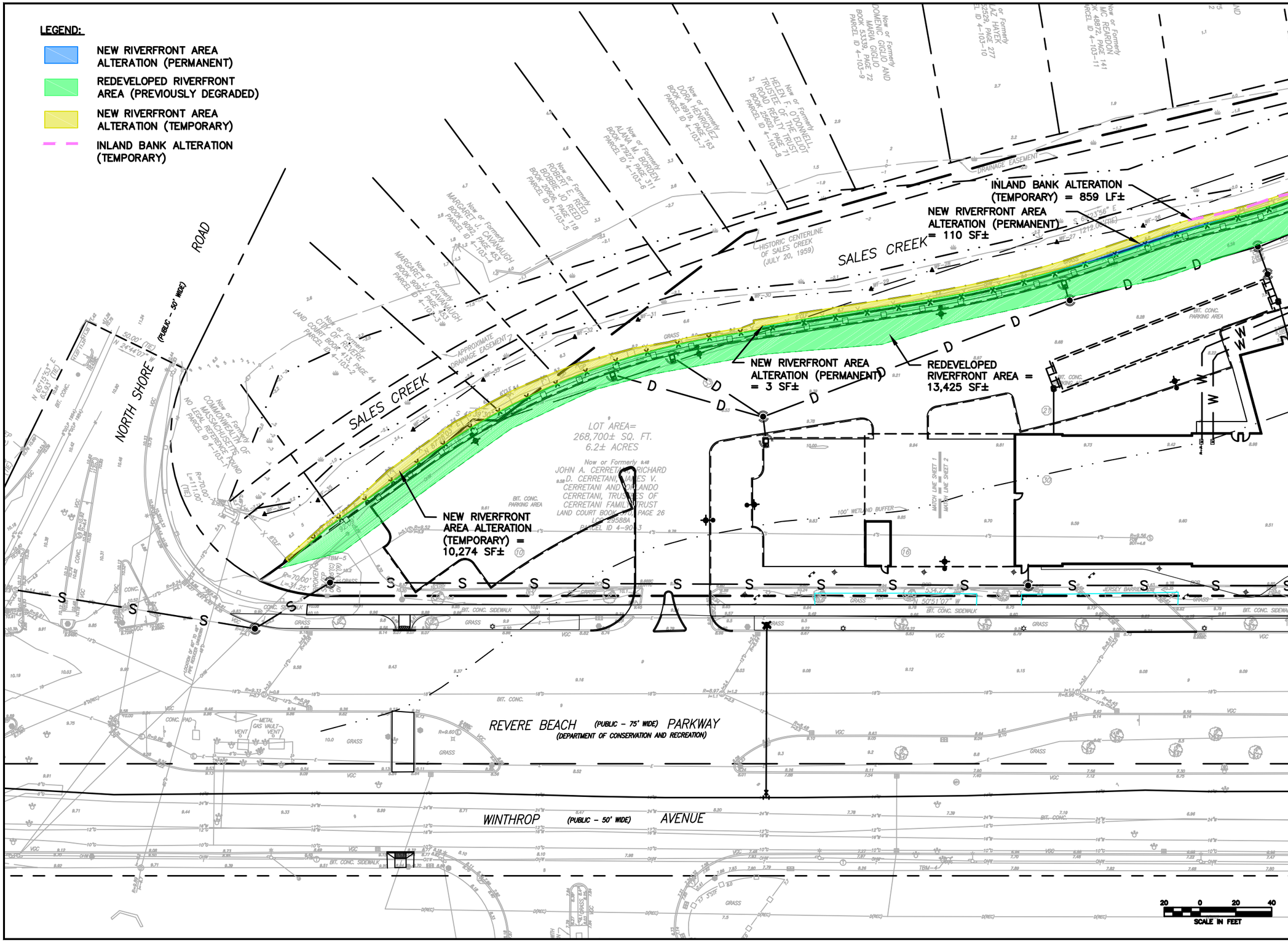

205 REVERE BEACH PARKWAY

REVERE, MA 02151

REVISIONS:

NO	BY	DATE	DESCRIPTION

WETLANDS ALTERATION PLAN

DATE:	12/14/16
PROJECT NUMBER:	15040
DESIGNED BY:	HH
DRAWN BY:	HV
CHECKED BY:	RL

WA 1

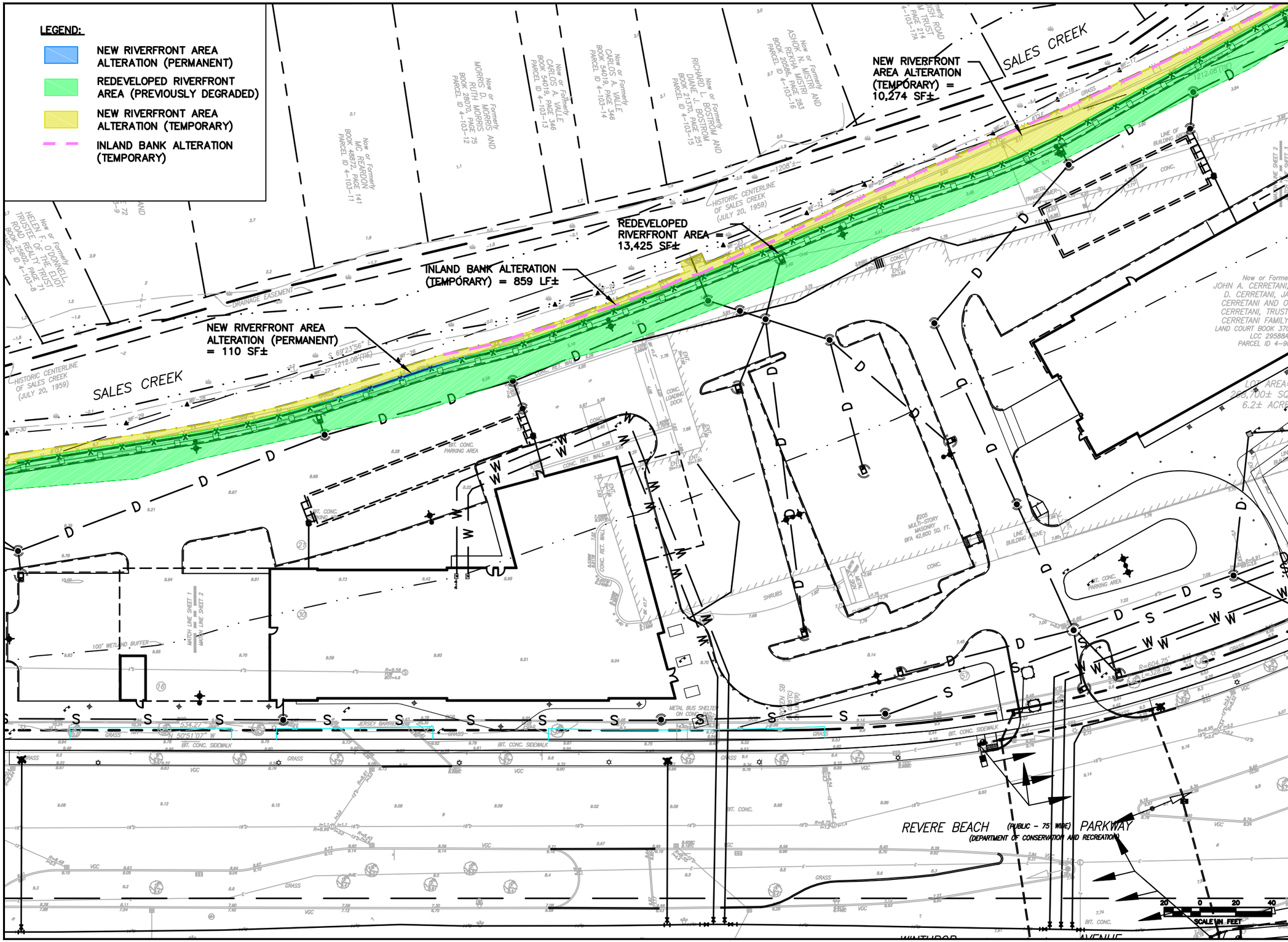

205 REVERE BEACH PARKWAY

REVERE, MA 02151

REVISIONS:

NO	BY	DATE	DESCRIPTION

WETLANDS ALTERATION PLAN

DATE:	12/14/16
PROJECT NUMBER:	15040
DESIGNED BY:	HH
DRAWN BY:	HV
CHECKED BY:	RL

WA 2

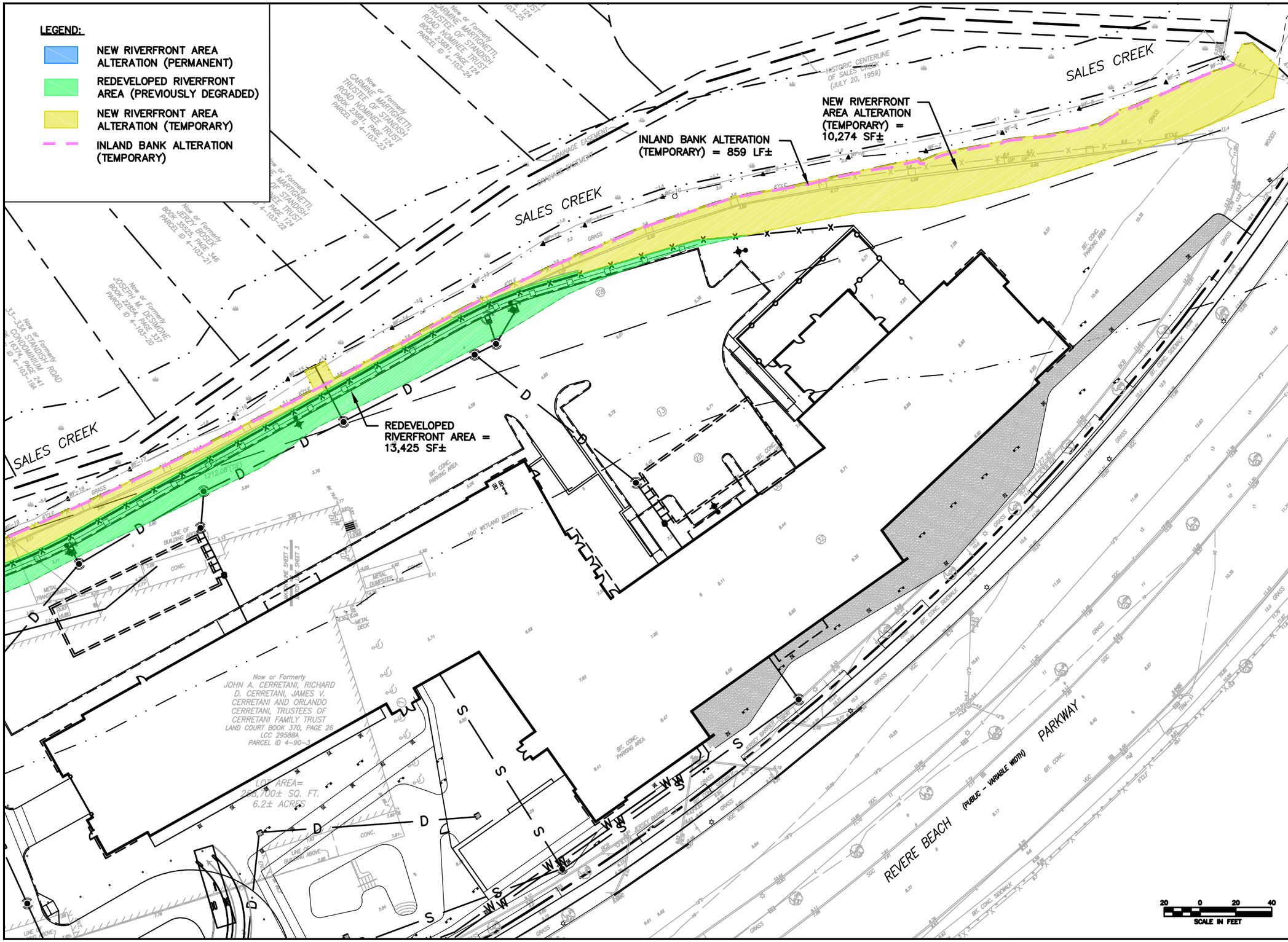

205 REVERE BEACH PARKWAY

REVERE, MA 02151

REVISIONS:

NO.	BY	DATE	DESCRIPTION

WETLANDS ALTERATION PLAN

DATE:	12/14/16
PROJECT NUMBER:	15040
DESIGNED BY:	HH
DRAWN BY:	HV
CHECKED BY:	RL

WA 3

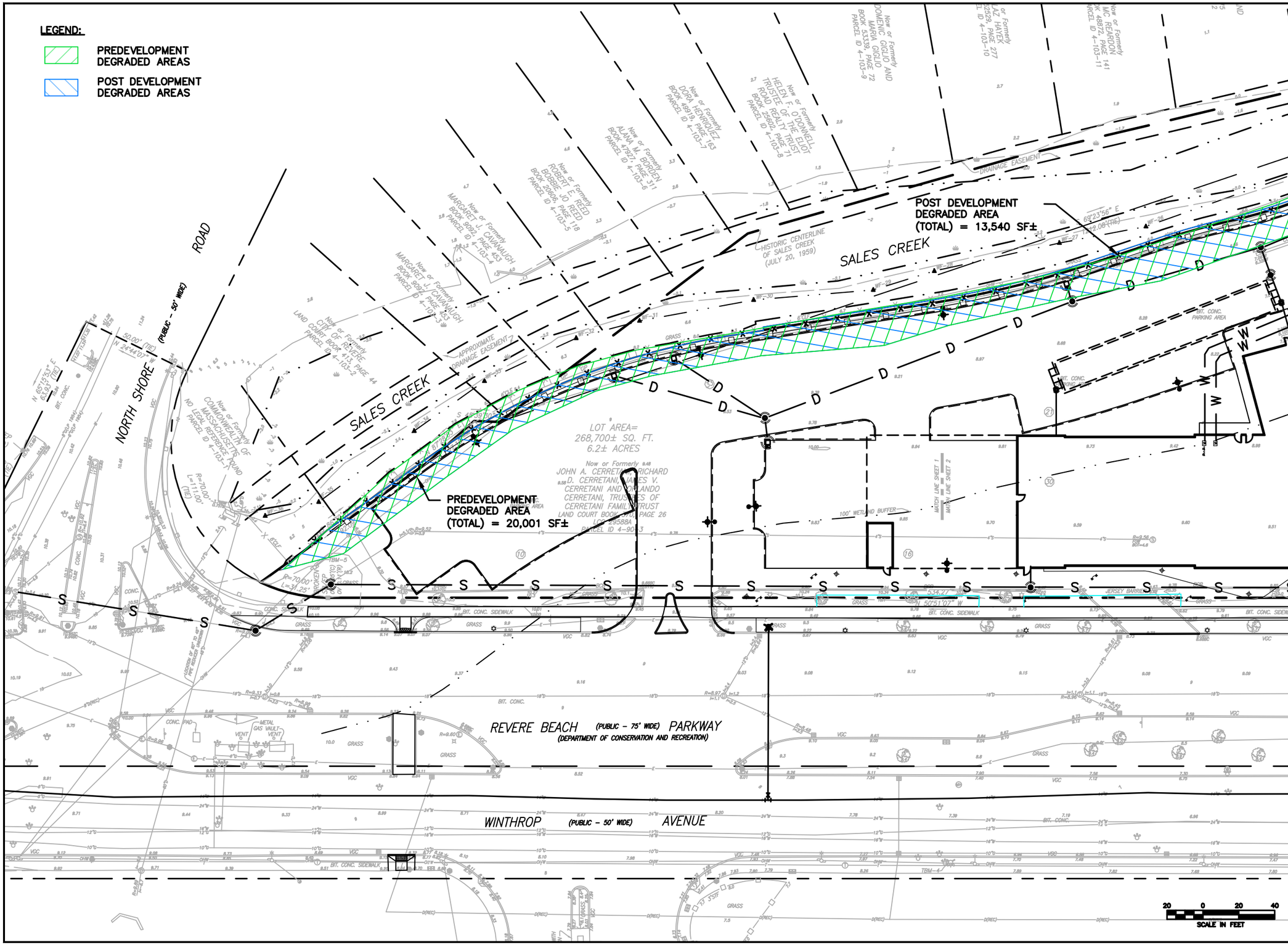

205 REVERE BEACH PARKWAY

REVERE, MA 02151

REVISIONS:

NO	BY	DATE	DESCRIPTION

RIVERFRONT AREA IMPACTS

DATE:	12/14/16
PROJECT NUMBER:	15040
DESIGNED BY:	HH
DRAWN BY:	HV
CHECKED BY:	RL

RA 1

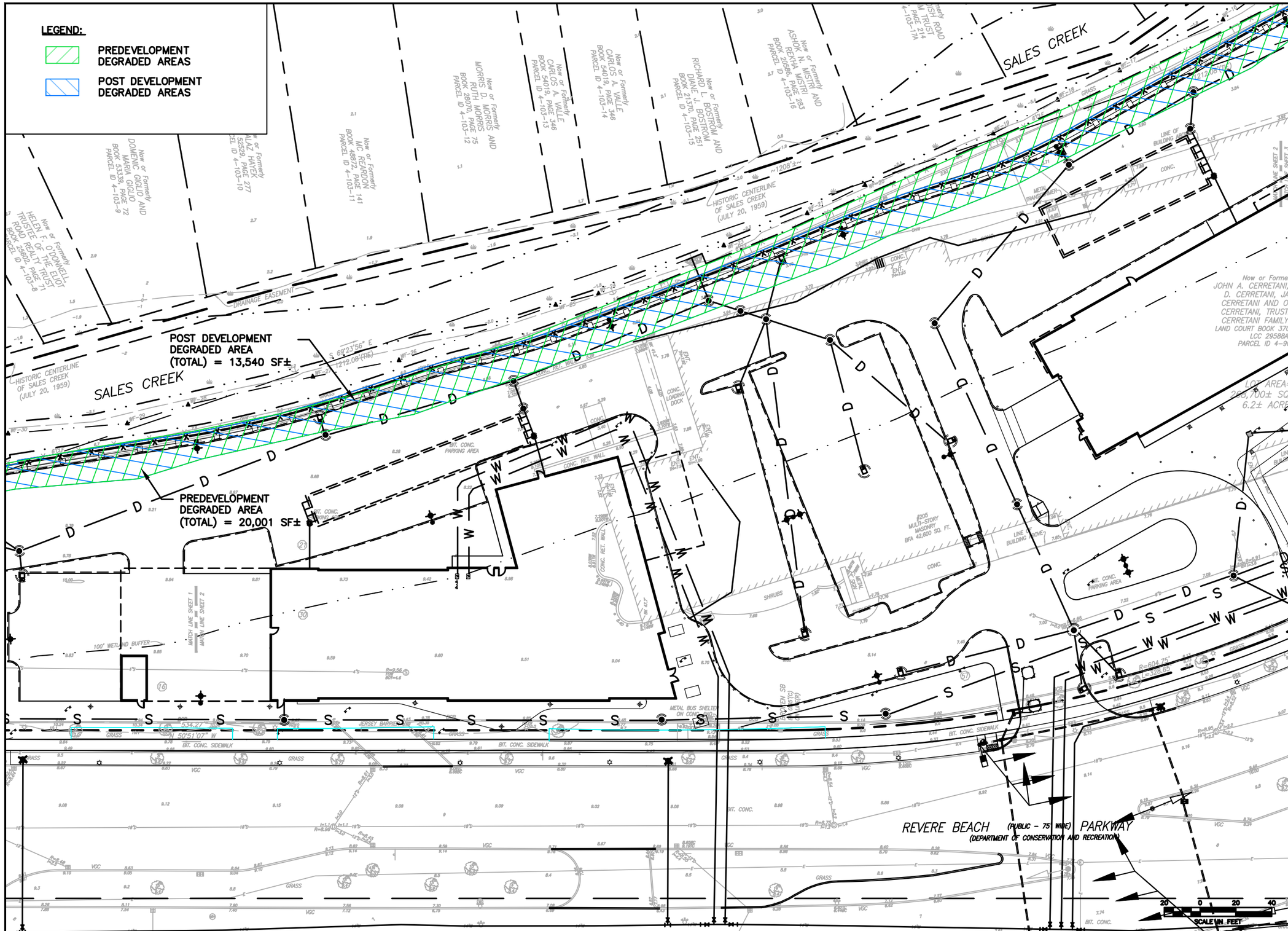

205 REVERE BEACH PARKWAY

REVERE, MA 02151

REVISIONS:

NO	BY	DATE	DESCRIPTION

RIVERFRONT AREA IMPACTS

DATE:	12/14/16
PROJECT NUMBER:	15040
DESIGNED BY:	HH
DRAWN BY:	HV
CHECKED BY:	RL

RA 2

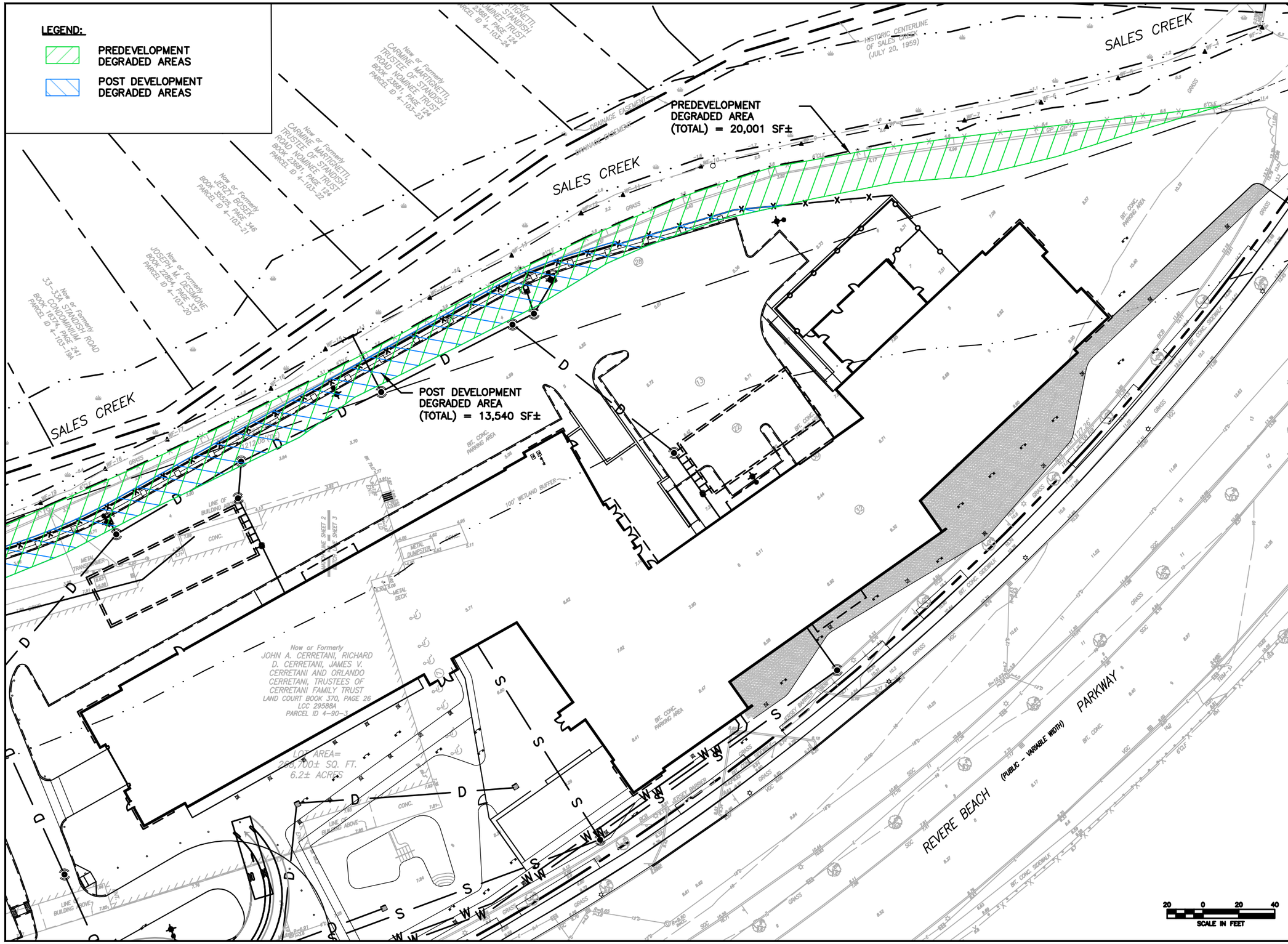

205 REVERE BEACH PARKWAY
REVERE, MA 02151

REVISIONS:

NO	BY	DATE	DESCRIPTION

RIVERFRONT AREA IMPACTS

DATE:	12/14/16
PROJECT NUMBER:	15040
DESIGNED BY:	HH
DRAWN BY:	HV
CHECKED BY:	RL

RA 3

Attachment I:
NOI Permit Drawings

PROVIDED UNDER SEPARATE COVER

Attachment J:
Stormwater Management Report & Checklist

PROVIDED UNDER SEPARATE COVER

Attachment K:
Approval of Designation of a Densely Developed Area

The Commonwealth of Massachusetts
Executive Office of Environmental Affairs
100 Cambridge Street, Boston, MA 02202

ARGEO PAUL CELLUCCI
GOVERNOR

JANE SWIFT
LIEUTENANT GOVERNOR

BOB DURAND
SECRETARY

Tel. (617) 727-9800
Fax (617) 727-2754
http://www.magnet.state.ma.us/envi

B

3-14-99

March 12, 1999

APPROVAL OF THE SECRETARY OF ENVIRONMENTAL AFFAIRS
OF A
DESIGNATION OF A DENSELY DEVELOPED AREA

PROJECT NAME	:Sales Creek Densely Developed Area
PROPONENT MUNICIPALITY	:Revere
PROJECT WATERSHED	:North Coastal
DATE NOTICED IN MONITOR	:February 10, 1999

Pursuant to the Massachusetts Wetlands Protection Act (M.G.L. c. 131 s. 40 as amended by St. 1996 c. 258) and M.G.L. c. 21A s. 2, and the regulations governing the designation of Densely Developed Areas (310 C.M.R. 10.00), I hereby approve the designation of a Densely Developed Area (DDA) in the municipality of Revere, as described below.

The DDA comprises an area of Revere bounded generally on the west by Lee Burbank Highway, on the north by Revere Beach Parkway and Standish Road, on the east by Bennington Street, and on the south by Diner Road (a private way through Suffolk Downs).
In particular, the approved DDA boundary runs as follows: from the conjunction of the northwesterly bank of Sales Creek and Lee Burbank Highway (Route 1A), and running along the northerly bank of Sales Creek to the fork in Sales Creek, thence along the northerly bank of the north fork and under Revere Beach Parkway, thence north of Revere Beach Parkway and south of Standish Road until the conjunction of the north branch of Sales Creek and Bennington Road south of Standish Road; and from the conjunction of the southwesterly bank of Sales Creek and Lee Burbank Highway along the southerly bank of Sales Creek to the fork in Sales Creek, thence along the south fork of Sales Creek, under Tomasello Road, and under the Suffolk Downs Race Track along the

Printed on Recycled Stock. 20% Post Consumer Waste.

Revere DDA Approval March 12, 1999

Revere/Boston corporate boundary, to its conjunction with Bennington Road.

I find that the petition submitted by the City of Revere meets the designation standards found at 310 C.M.R. 10.05. The total area proposed to be designated as densely developed is slightly more than 50 acres. According to the petition, approximately 31 acres of that area are in industrial and commercial use, and 20 acres are in residential use. The whole of the area is within the 200 foot riverfront area. With several isolated exceptions, the area is utilized intensively by commercial, industrial, and residential uses or by underutilized but disturbed land. Most of the underdeveloped land is composed of fill, much of it covered by invasive, nuisance vegetation.

The DDA petition area is a well conceived proposal in keeping with the letter and spirit of the DDA regulations. The DDA petition resulted in several comment letters to me in favor of the petition, and several letters raising concerns about the petition and offering solutions to problems that could follow the DDA designation. Specifically, I refer the City of Revere to the comment letters from the Department of Environmental Management, the Office of Coastal Zone Management, and the Metropolitan Area Planning Council for guidance on how the City and future developers can repair existing damage to Sales Creek and avoid or mitigate potential future impacts. I anticipate that the designation of the DDA will serve to focus new development in an already disturbed and densely developed area, where density of development makes environmentally more sustainable transportation options (such as transit or vanpooling) more feasible.

In accordance with the DDA regulations, the designation described above takes effect immediately.

March 12, 1999
Date

Bob Durand

Revere DDA Approval March 12, 1999

Comments received :

1/25/99	State Senator Robert E. Travaglini and State Representatives Robert A. DeLeo, Emmanuel G. Serra, and Kathi-Anne Reinstein
2/22/99	Riverways Program
3/2/99	Office of Coastal Zone Management
3/2/99	Stephanie DeSisto, Revere Neighborhood Association
3/3/99	Adele J. Toro
3/3/99	Metropolitan Area Planning Council
3/4/99	Department of Environmental Management

BD/LER/ler

Attachment L:
FEMA Documentation

not necessarily identify all areas subject to flooding, particularly from local drainage sources of small size. The **community map repository** should be consulted for possible updated or additional flood hazard information.

To obtain more detailed information in areas where **Base Flood Elevations** (BFEs) and/or **floodways** have been determined, users are encouraged to consult the Flood Profiles and Floodway Data and/or Summary of Stillwater Elevations tables contained within the Flood Insurance Study (FIS) Report that accompanies this FIRM. Users should be aware that BFEs shown on the FIRM represent rounded whole-foot elevations. These BFEs are intended for flood insurance rating purposes only and should not be used as the sole source of flood elevation information. Accordingly, flood elevation data presented in the FIS Report should be utilized in conjunction with the FIRM for purposes of construction and/or floodplain management.

Coastal Base Flood Elevations shown on this map apply only landward of 0.0' North American Vertical Datum of 1988 (NAVD 88). Users of this FIRM should be aware that coastal flood elevations are also provided in the Summary of Stillwater Elevations table in the Flood Insurance Study Report for this jurisdiction. Elevations shown in the Summary of Stillwater Elevations table should be used for construction and/or floodplain management purposes when they are higher than the elevations shown on this FIRM.

Boundaries of the **floodways** were computed at cross sections and interpolated between cross sections. The floodways were based on hydraulic considerations with regard to requirements of the National Flood Insurance Program. Floodway widths and other pertinent floodway data are provided in the Flood Insurance Study Report for this jurisdiction.

The AE Zone category has been divided by a **Limit of Moderate Wave Action (LiMWA)**. The LiMWA represents the approximate landward limit of the 1.5-foot breaking wave. The effects of wave hazards between the VE Zone and the LiMWA (or between the shoreline and the LiMWA for areas where VE Zones are not identified) will be similar to, but less severe than those in the VE Zone.

Certain areas not in Special Flood Hazard Areas may be protected by **flood control structures**. Refer to Section 2.4 "Flood Protection Measures" of the Flood Insurance Study Report for information on flood control structures for this jurisdiction.

The **projection** used in the preparation of this map was Massachusetts State Plane Mainland Zone (FIPS zone 2001). The **horizontal datum** was NAD 83, GRS 1980 spheroid. Differences in datum, spheroid, projection or UTM zones used in the production of FIRMs for adjacent jurisdictions may result in slight positional differences in map features across jurisdiction boundaries. These differences do not affect the accuracy of this FIRM.

Flood elevations on this map are referenced to the North American Vertical Datum of 1988. These flood elevations must be compared to structure and ground elevations referenced to the same **vertical datum**. For information regarding conversion between the National Geodetic Vertical Datum of 1929 and the North American Vertical Datum of 1988, visit the National Geodetic Survey website at http://www.ngs.noaa.gov or contact the National Geodetic Survey at the following address:

NGS Information Services
NOAA, N/NGS12
National Geodetic Survey
SSMC-3, #9202
1315 East-West Highway
Silver Spring, Maryland 20910-3282
(301) 713-3242

To obtain current elevation, description, and/or location information for **bench marks** shown on this map, please contact the Information Services Branch of the National Geodetic Survey at **(301) 713- 3242**, or visit its website at http://www.ngs.noaa.gov.

Base map information shown on this FIRM is derived from Massachusetts Geographic Information System (MassGIS) digital ortho-photography produced at 45 centimeter (2005) and 30 centimeter (2008) resolution. Aerial photography is dated Spring 2005 and Spring 2008.

The **profile baselines** depicted on this map represent the hydraulic modeling baselines that match the flood profiles in the FIS report. As a result of improved topographic data, the **profile baseline**, in some cases, may deviate significantly from the channel centerline or appear outside the SFHA.

Based on updated topographic information, this map reflects more detailed and up-to-date **stream channel configurations and floodplain delineations** than those shown on the previous FIRM for this jurisdiction. As a result, the Flood Profiles and Floodway Data Tables for multiple streams in the Flood Insurance Study Report (which contains authoritative hydraulic data) may reflect stream channel distances that differ from what is shown on the map. Also, the road to floodplain relationships for unrevised streams may differ from what is shown on previous maps.

Corporate limits shown on this map are based on the best data available at the time of publication. Because changes due to annexations or de-annexations may have occurred after this map was published, map users should contact appropriate community officials to verify current corporate limit locations.

Please refer to the separately printed **Map Index** for an overview map of the county showing the layout of map panels; community map repository addresses; and a Listing of Communities table containing National Flood Insurance Program dates for each community as well as a listing of the panels on which each community is located.

For information on available products associated with this FIRM visit the **Map Service Center (MSC)** website at http://msc.fema.gov. Available products may include previously issued Letters of Map Change, a Flood Insurance Study Report, and/or digital versions of this map. Many of these products can be ordered or obtained directly from the MSC website.

If you have **questions about this map,** how to order products, or the National Flood Insurance Program in general, please call the **FEMA Map Information eXchange (FMIX)** at **1-877-FEMA-MAP** (1-877-336-2627) or visit the FEMA website at http://www.fema.gov/business/nfip.

The 1% annual chance flood (100-year flood), also known as the base flood, is the flood that has a 1% chance of being equaled or exceeded in any given year. The Special Flood Hazard Area is the area subject to flooding by the 1% annual chance flood. Areas of Special Flood Hazard include Zones A, AE, AH, AO, AR, A99, V, and VE. The Base Flood Elevation is the water-surface elevation of the 1% annual chance flood.

ZONE A	No Base Flood Elevations determined.
ZONE AE	Base Flood Elevations determined.
ZONE AH	Flood depths of 1 to 3 feet (usually areas of ponding); Base Flood Elevations determined.
ZONE AO	Flood depths of 1 to 3 feet (usually sheet flow on sloping terrain); average depths determined. For areas of alluvial fan flooding, velocities also determined.
ZONE AR	Special Flood Hazard Areas formerly protected from the 1% annual chance flood by a flood control system that was subsequently decertified. Zone AR indicates that the former flood control system is being restored to provide protection from the 1% annual chance or greater flood.
ZONE A99	Area to be protected from 1% annual chance flood by a Federal flood protection system under construction; no Base Flood Elevations determined.
ZONE V	Coastal flood zone with velocity hazard (wave action); no Base Flood Elevations determined.
ZONE VE	Coastal flood zone with velocity hazard (wave action); Base Flood Elevations determined.

FLOODWAY AREAS IN ZONE AE

The floodway is the channel of a stream plus any adjacent floodplain areas that must be kept free of encroachment so that the 1% annual chance flood can be carried without substantial increases in flood heights.

OTHER FLOOD AREAS

ZONE X Areas of 0.2% annual chance flood; areas of 1% annual chance flood with average depths of less than 1 foot or with drainage areas less than 1 square mile; and areas protected by levees from 1% annual chance flood.

OTHER AREAS

ZONE X Areas determined to be outside the 0.2% annual chance floodplain.

ZONE D Areas in which flood hazards are undetermined, but possible.

COASTAL BARRIER RESOURCES SYSTEM (CBRS) AREAS

OTHERWISE PROTECTED AREAS (OPAs)

CBRS areas and OPAs are normally located within or adjacent to Special Flood Hazard Areas.

1% Annual Chance Floodplain Boundary
0.2% Annual Chance Floodplain Boundary
Floodway boundary
Zone D boundary
CBRS and OPA boundary

Boundary dividing Special Flood Hazard Area Zones and boundary dividing Special Flood Hazard Areas of different Base Flood Elevations, flood depths, or flood velocities.

Limit of Moderate Wave Action

Limit of Moderate Wave Action coincident with Zone Break

513 — Base Flood Elevation line and value; elevation in feet*

(EL 987) — Base Flood Elevation value where uniform within zone; elevation in feet*

*Referenced to the North American Vertical Datum of 1988

A — A: Cross section line

23 - - - - 23: Transect line

Culvert

Bridge

45° 02' 08", 93° 02' 12" — Geographic coordinates referenced to the North American Datum of 1983 (NAD 83) Western Hemisphere

4989000 M — 1000-meter grid: Massachusetts State Plane Mainland Zone (FIPS Zone 2001), Lambert Conformal Conic projection

4689000 N — 1000-meter Universal Transverse Mercator tick values, zone 19N

DX5510 × — Bench mark (see explanation in Notes to Users section of this FIRM panel)

MAP REPOSITORIES
Refer to Map Repositories list on Map Index

EFFECTIVE DATE OF COUNTYWIDE
FLOOD INSURANCE RATE MAP
September 25, 2009

EFFECTIVE DATE(S) OF REVISION(S) TO THIS PANEL
March 16, 2016 - to change Base Flood Elevations and Special Flood Hazard Areas, to change zone designations, to update the effects of wave action, to update corporate limits, to add roads and road names, to incorporate previously issued Letters of Map Revision and to modify Coastal Barrier Resource System units.

For community map revision history prior to countywide mapping, refer to the Community Map History table located in the Flood Insurance Study report for this jurisdiction.

To determine if flood insurance is available in this community, contact your insurance agent or call the National Flood Insurance Program at 1-800-638-6620.

MAP SCALE 1" = 500'

250 0 500 1000 FEET
150 0 150 300 METERS

NFIP
NATIONAL FLOOD INSURANCE PROGRAM

PANEL 0038J

FIRM
FLOOD INSURANCE RATE MAP
SUFFOLK COUNTY, MASSACHUSETTS
(ALL JURISDICTIONS)

PANEL 38 OF 176
(SEE MAP INDEX FOR FIRM PANEL LAYOUT)

CONTAINS:

COMMUNITY	NUMBER	PANEL	SUFFIX
BOSTON, CITY OF	250286	0038	J
REVERE, CITY OF	250288	0038	J
WINTHROP, TOWN OF	250289	0038	J

Notice to User: The **Map Number** shown below should be used when placing map orders; the **Community Number** shown above should be used on insurance applications for the subject community.

MAP NUMBER
25025C0038J

FLOOD INSURANCE STUDY

SUFFOLK COUNTY, MASSACHUSETTS
(ALL JURISDICTIONS)

COMMUNITY NAME	COMMUNITY NUMBER
BOSTON, CITY OF	250286
CHELSEA, CITY OF	250287
REVERE, CITY OF	250288
WINTHROP, TOWN OF	250289

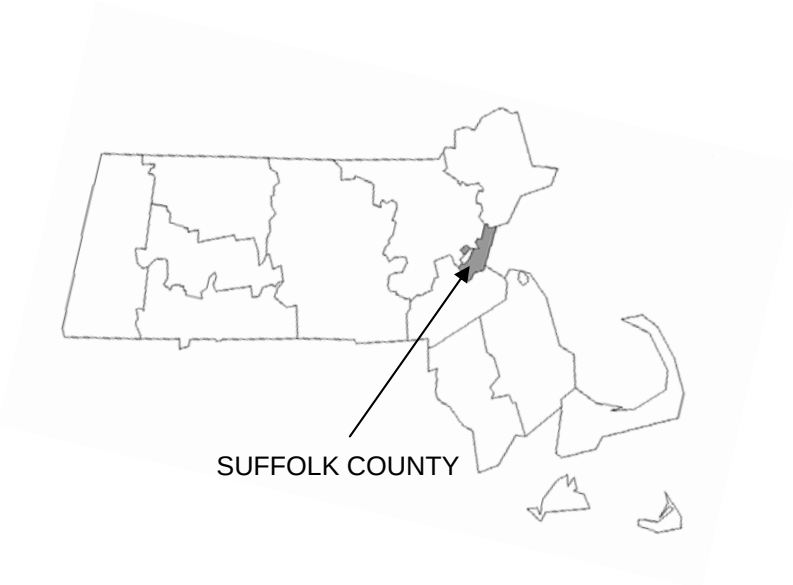

REVISED
MARCH 16, 2016

Federal Emergency Management Agency

FLOOD INSURANCE STUDY NUMBER
25025CV000B

Revere, City of:	The hydrologic and hydraulic analyses for the original April 16, 1984, FIS report and the October 16, 1984, Revere FIRM (hereinafter referred to as the 1984 Revere FIS), were prepared by Stone & Webster Engineering Corporation for FEMA under Contract No. H-4772 Modification No. 5. That work was completed in April 1983. The hydrologic and hydraulic analyses for the August 20, 2002 revision were prepared by Roald Haestad, Inc. for FEMA under Contract No. EMB-1999-CO-0564. This work was completed in November 2000.
Winthrop, Town of:	The hydrologic and hydraulic analyses for the original and revised February 15, 1984 FIS were prepared by Stone & Webster Engineering Corporation for FEMA under Contract No. H-4772. This work was completed in January 1983.

For the 2009 countywide study, the 1- and 0.2-percent-annual-chance floodplain boundaries for the Atlantic coastline in Suffolk County were redelineated using more up to date topographic information, including MassGIS and LiDAR data, which meets the accuracy standards for flood hazard mapping (https://www.mass.gov/mgis/ and https://maps.csc.noaa.gov.TMC/). That work was performed by CDM for FEMA, under Contract No. EME-2003-CO-0340, and by Ocean and Coastal Consultants, Inc. for CDM, under Contract No. 2809-999-003-CS. No new detailed or approximate studies were performed.

The coastal wave height analysis for this coastal study was prepared by the Strategic Alliance for Risk Reduction (STARR) for FEMA under Contract No. HSFEHQ-09-D-0370 and completed September 13, 2013. This new analysis resulted in revisions to the coastal Special Flood Hazards Areas (SFHA) for all communities in Suffolk County. The far outer islands in Boston Harbor (City of Boston) were not included in this analysis.

STARR mapped the results of the September 13, 2013 analysis under Contract No. HSFEHQ-09-D-0370 up to the November 13, 2013 Preliminary release of the Suffolk County FIS.

FEMA funded the Post Preliminary Processing of coastal analyses based on appeal under Contract No. HSFEHQ-09-D-0370 and Task Order No.s HSFEHQ-10-J-0004 and HSFE01-14-J-0015. Under this contract, the hydrologic and hydraulic analyses in the November 13, 2013 Preliminary FIS report were updated by STARR for FEMA for the Belle Island Inlet, Boston Harbor, Dorchester Bay and the Pines, Chelsea, Charles, and Neponset River flooding sources affecting the communities of Boston, Chelsea, Revere, and Winthrop. That work was completed May 30, 2015.

For the 2009 countywide study FIRM panels, base map information shown was derived from digital orthophotography. Base map files were provided in digital form by Massachusetts Geographic Information System (MassGIS). Ortho imagery was produced at a scale of 1:5,000. Aerial photography is dated April 2005. The projection used in the preparation of this map was Massachusetts State Plane mainland zone (FIPSZONE2001). The horizontal datum was NAD 83, GRS80 spheroid (Reference 2).

Neponset River. The harbor has a number of islands including Deer, Spectacle, Thompson, Long and Gallops Islands. The entire coastline is densely developed, and much of the waterfront is under redevelopment pressure. Much of the recent construction has involved the downtown waterfront area, including condominiums, offices, parks and commercial establishments.

2.3 Principal Flood Problems

Suffolk County is most vulnerable to riverine and coastal flooding from severe storms that produce heavy rain, such as hurricanes, tropical storms and northeasters; and winter events that can produce significant snowfall and heavy rain. Snowmelt and ice jams can also create flood hazards. The Suffolk County coastline is heavily populated and susceptible to coastal storms with high winds, causing coastal erosion and storm surge.

Investigations into flooding within the corporate limits of Boston have revealed that there has been severe flooding resulting in extensive damage, especially to the Charles River Basin and the surrounding lowlands. The problem is caused primarily by the difference between the established normal water level in the basin and the high tide in the harbor. In the flood of August 1955, 12.5 inches of rain coupled with a peak high tide of 8.2 feet resulted in raising the basin elevation to a record high of 6.90 feet. Over 1,750 acres, mostly highly-developed Cambridge and Boston, lying along the 8.6-mile long basin were subject to serious flooding. The 1955 hurricane, equivalent to a 1-percent-annual-chance storm, resulted in flood damage along the lower Charles River amounting to 5.5 million dollars. The same flood level in 1980 would have resulted in an estimated damage of 20 million dollars. In March 1968, 7.7 inches of rain combined with the spring thaw produced the second highest basin levels of 4.5 feet, inundating many areas along Storrow Drive. Although the peak discharge upstream was the same as the 1955 flood, the river peak did not coincide with the tidal peaks as in the 1955 flood, and resulting damage was less extensive. Flooding problems from the 1955 and 1968 storms also occurred along the Neponset River in the Hyde Park area. Numerous private properties, automobiles and roadways were damaged as a result of the storm.

Flooding also occurs along the coastline of Boston and Chelsea and in the low-lying coastal areas of Revere and Winthrop, greatly influenced by storm surge elevations of Boston Harbor that result from severe storms. The most recent example of severe flooding was during the northeaster of February 1978, which was comparable to a 1-percent-annual-chance flood event. Elevations of flooding ranged from 8.6 to 10.1 feet, which caused one to three feet of flooding in areas such as Rowes, India, Long, Commercial and Battery Wharves. Low-level flooding occurred at a number of East Boston locations such as East Boston Pier, the airport access road, and several parking lots on commercial piers. More serious damage occurred as a result of wave action. The recorded flood elevation was 9.8 feet at the New Charles River Dam, 9.5 feet at the U.S.S. Constitution, and 9.5 feet at the Commonwealth Pier gage. The 1978 northeaster caused significant damage in excess of $15 million in the City of Revere. Other significant storms to cause flooding in Revere include the storms of December 1909 and 1959 (a flood event that had approximately 0.6- and 6.7-percent-annual-chance of occurring or being exceeded, respectively) and February 1972 (approximate recurrence of 4-percent-annual-chance).

In Chelsea, severe flooding due to poor drainage frequently occurs near Mill Creek upstream of U.S. Route 1. This area was not studied in detail because of its small drainage

Revised coastal analyses were performed for the open water flooding sources for Belle Island Inlet, Boston Harbor, Dorchester Bay and the Pines, Chelsea, Charles, and Neponset River flooding sources affecting the communities of Boston, Chelsea, Revere, and Winthrop. A description of these revised analyses is presented in the countywide coastal analyses sections below.

Coastal Stillwater elevations presented in the pre-countywide FISs that have not been superseded by this coastal study update have been compiled and are summarized below.

Pre-countywide Analyses

Stillwater elevations for the Charles River Basin upstream of the New Charles River Dam were obtained from a 1979 USACE report (Reference 30). The 2013 coastal study extends only as far as the Route 28 bridge over the Charles River between Boston and Cambridge, therefore the pre-countywide analysis of the Charles River remains in effect upstream of that point.

The pre-countywide stillwater elevations have been determined for the 10-, 2-, 1-, and 0.2-percent-annual-chance floods for the flooding sources studied by detailed methods and are summarized in Table 7, "Summary of Pre-countywide Stillwater Elevations."

TABLE 7 – SUMMARY OF PRE-COUNTYWIDE STILLWATER ELEVATIONS

FLOODING SOURCE AND LOCATION	ELEVATION (NAVD 88)[1]			
	10-PERCENT-ANNUAL-CHANCE	2-PERCENT-ANNUAL-CHANCE	1-PERCENT-ANNUAL-CHANCE	0.2-PERCENT-ANNUAL-CHANCE
CHARLES RIVER BASIN				
Immediately upstream of Route 28 Bridge	3.0	3.2	3.5	5.2

[1]North American Vertical Datum of 1988 (NAVD 88)

2013 Coastal Study

The stillwater elevation is the elevation of the water due to the effects of the astronomic tides and storm surge on the water surface. Hydrologic analyses carried out to establish the peak discharge-frequency relationships for the Belle Island Inlet, Boston Harbor, Dorchester Bay and the Pines, Chelsea, Charles, and Neponset River flooding sources affecting the communities of Boston, Chelsea, Revere, and Winthrop serve as a basis of coastal hydraulic analyses using detailed methods in accordance with Appendix D of the "Guidance for Coastal Flooding Analyses and Mapping," of the April 2003 FEMA "Guidelines and Specifications for Flood Hazard Mapping Partners" (Reference 31).

For this study, the 10-, 2-, 1-, and 0.2-percent-annual-chance floods for the nearest gages to Suffolk County on the Belle Island Inlet, Boston Harbor, Dorchester Bay and the Pines, Chelsea, Charles, and Neponset River were obtained from the "Regional Frequency Analyses using L-Moments" memorandum developed by STARR (Reference 32) for areas subject to coastal flooding. There is one gage located within Suffolk County. Stillwater

TABLE 9 – SUMMARY OF REVISED COASTAL STILLWATER ELEVATIONS - continued

FLOODING SOURCE AND LOCATION	ELEVATION (NAVD 88)[1] 10-PERCENT-ANNUAL-CHANCE	2-PERCENT-ANNUAL-CHANCE	1-PERCENT-ANNUAL-CHANCE	0.2-PERCENT-ANNUAL-CHANCE
Boston Inner Harbor				
Entire shoreline in the City of Boston	*	*	9.4	10.2
Dorchester Bay				
At Old Harbor	*	*	9.7	10.5
West of Thompson Island	*	*	9.9	10.7
At Neponset River	*	*	10.6	11.4
Massachusetts Bay				
At Deer and Lovell Islands	*	*	9.2	10.1
Mystic River				
Immediately upstream of Mystic River Bridge	*	*	9.5	*

[1]North American Vertical Datum of 1988 (NAVD 88)
*Data not available

3.4 Coastal Hydraulic Analyses

The hydraulic methods described in this section are those used for the 2013 coastal study.

As a result of incorporating appeals received during the study, there are different coastal hydraulic methods used based upon the source of the studied transect. Table 10, "Summary of Transect Methodology" contains the wave climatology and wave setup information used on each transect along with the study source.

TABLE 10 – SUMMARY OF TRANSECT METHODOLOGY

TRANSECT	1-PERCENT-ANNUAL-CHANCE STILLWATER[1]	SIGNIFICANT WAVE HEIGHT[1]	PEAK PERIOD	HOW DETERMINED	WAVE SETUP	HOW DETERMINED
1	9.2	2.3	12.5	SWAN 2D	0.46	SWAN 1D
2	9.2	5.8	12.5	SWAN 2D	0.94	SWAN 1D
3	9.2	21.22	12.5	SWAN 2D	1.76	SWAN 1D
4	9.2	21.22	12.5	SWAN 2D	1.76	SWAN 1D
5	9.2	21.22	12.5	SWAN 2D	1.86	SWAN 1D
6	9.2	21.22	12.5	SWAN 2D	1.9	SWAN 1D
7	9.8	21.22	12.5	STWAVE	3.12	DIM

[1]North American Vertical Datum of 1988 (NAVD 88)

model that simulates depth-induced wave refraction and shoaling, depth-and steepness-induced wave breaking, diffraction, wind-wave growth, and wave-wave interaction and white capping that redistribute and dissipate energy in a growing wave field. The model accepts a spectral form of the wave as an input condition and provides Hmo and Tp results over the gridded model domain.

STARR team developed STWAVE models for the entire coastline of Suffolk County, and the results were obtained from the model for the coastal flooding analysis in the Cities of Boston, Chelsea, Revere, and the Town of Winthrop.

Offshore (deepwater) wave heights, wave setup, and wave runup for each transect were calculated using Mathcad sheets developed by STARR to apply methodologies from the USACE's Coastal Engineering Manual (Reference 33) and FEMA Guidelines and Specifications (Reference 34). Methodologies for each type of calculation are discussed in more detail below. Results from the Mathcad calculations performed for each transect were compiled in a summary spreadsheet.

SWAN

SWAN is a third-generation wave model, approved by FEMA, for obtaining realistic estimates of wave parameters in coastal areas from given wind, bottom, and current conditions. SWAN includes wave generation, dissipation, non-linear interactions, and transformations. It also includes bottom friction, currents, shoaling, refraction, diffraction, depth induced breaking, and wave setup. SWAN represents a model based approach that accounts for the physics of the waves, including the process of wave setup.

The SWAN 2D simulations were run using the same model domains, bathymetric grids, wind, and input deepwater wave conditions that were utilized during the STWAVE modeling for Suffolk County. Data available from the US Army Corps of Engineers (USACE) Wave Information Studies (WIS) were used to confirm the deepwater wave conditions used to drive the STWAVE model. The WIS database contains 20 years of wave hindcast data from 1979 to 1999 at locations along the Atlantic, Gulf of Mexico, and Pacific US coastlines. The closest WIS station to Boston Harbor is Sta. 63053, located near the southeast corner of the coarse grid model domain. Extremal analyses published by the USACE on data from Sta. 63053 indicate a 100-year wave height of 9.35 meters (30.66 ft).

Results from the SWAN 2D simulation of 100-year wave conditions were used to generate significant wave conditions required for input at each transect in FEMA's CHAMP program. FEMA followed the same steps in using results from their STWAVE model to generate significant wave conditions needed for CHAMP. However, FEMA's criteria used to select representative wave conditions from the model output (as described above) varied from those used for transects evaluated in the appeals. The SWAN model also provides a more robust approach for producing wind-generated waves, in addition to the wave transformations. This is particularly important for complex shorelines and sheltered regions like Boston Harbor where the ocean swell waves may eventually have less energy than the local wind generated waves. As such, SWAN generally produces higher wave heights in areas where the wind-generated components of the wave field become more dominant.

Coastal engineering analysis was performed for each coastal transect using wave condition extracted from the wave climatology model output and stillwater elevation (SWEL) data to generate wave setup and wave runup values for open coast transects and transects with vertical structures or revetments, and to generate input used in developing CHAMP and WHAFIS input data. Mathcad sheets were developed and applied by STARR for the calculations to help ensure consistency and accuracy. The input data and results of the analysis were compiled for each transect in a summary spreadsheet. The Mathcad sheets and summary spreadsheet are included in the digital data files compiled for the coastal submittal. This STWAVE model was developed for the entire coastline of Suffolk County, and the results were obtained from the model for the coastal flooding analysis in the Cities of Boston, Chelsea, and Revere; and the Town of Winthrop.

CHAMP is a Microsoft (MS) Windows-interfaced Visual Basic language program that allows the user to enter data, perform coastal engineering analyses, view and tabulate results, and chart summary information for each representative transect along a coastline within a user-friendly graphical interface. With CHAMP, the user can import digital elevation data, perform storm-induced erosion treatments, wave height and wave runup analyses, plot summary graphics of the results, and create summary tables and reports in a single environment. CHAMP version 2.0 (Reference 36) was used to perform erosion analysis, run WHAFIS, and apply RUNUP 2.0 to transects without coastal structures. Application of CHAMP followed the instructions in the FEMA Guidelines and Specifications (Reference 34) and the Coastal Hazard Analysis Modeling Program user's guide found in the software documentation (Reference 37).

Wave Setup

Direct Integration Method

Wave setup can be a significant contributor to the total water level at the shoreline and was included in the determination of coastal base flood elevations. Wave setup is defined as the increase in total stillwater elevation against a barrier caused by the attenuation of waves in shallow water. Wave setup is based upon wave breaking characteristics and profile slope. Wave setup values were calculated for each coastal transect using the Direct Integration Method (DIM),developed by Goda (2000) (Reference 38), as described in the FEMA Guidelines and Specifications, Equation D.2.6-1. For those coastal transects where a structure was located, documentation was gathered on the structure, and the wave setup against the coastal structure was also calculated.

SWAN

For the appeal submitted engineering, the wave setup values were revised using the SWAN 1D model. Results from the SWAN 2D simulation of 100-year wave conditions were used as input to drive SWAN 1D simulations at each of the transects evaluated as part of the appeal. The purpose of the SWAN 1D simulations was to develop wave setup at each site specific transect location.

Bathymetric and topographic conditions were taken directly from the 2013 Preliminary FIS FEMA CHAMP database. Transects where FEMA modeled structure failure and erosion were utilized in place of the intact conditions. The FEMA CHAMP transect data were interpolated to an evenly-spaced 1 meter resolution for input to SWAN 1D. Water levels were set to reflect the revised 100-year SWELs shown in Table 10. Incident wave

TABLE 11 – TRANSECT DESCRIPTIONS - continued

TRANSECT	LOCATION	ELEVATION (feet NAVD 88[2]) 1-PERCENT-ANNUAL-CHANCE STILLWATER	MAXIMUM 1-PERCENT ANNUAL CHANCE WAVE CREST[1]
6	The transect crosses sandy beach separated from the upland area by a small 2.5 foot concrete seawall at Revere Beach Blvd. Upland development consists of mostly parking lots and some high rise residential structures.	9.2	17.0
7	This transect extends over a gabion revetment and 15 foot concrete seawall into the residential area of Roughan's Point Revere. The shoreline is heavily engineered with a gabion revetment approximately 20 feet wide and 6 feet high.	9.8	19.8
8	The transect crosses a mixed sand and gravel beach and 7 foot concrete seawall with some large gabions at the base of Winthrop Parkway (State Highway 145) near Beachmont in Revere. Upland development consists of single and multi-family residential units.	9.2	17.2
9	The transect crosses a cobble shoreline with both stable and eroding sections of 12 ft gabion revetment. Upland development is medium density single-family residential. Elevations increase sharply moving inland.	9.1	18.1
10	The transect crosses a cobble beach with a double concrete revetment built into the steep hillside at Seal Point in Winthrop. Upland development consists of large high-rise apartment buildings.	9.7	22.3

[1]Because of map scale limitations, the maximum wave elevation may not be shown on the FIRM.
[2]North American Vertical Datum of 1988

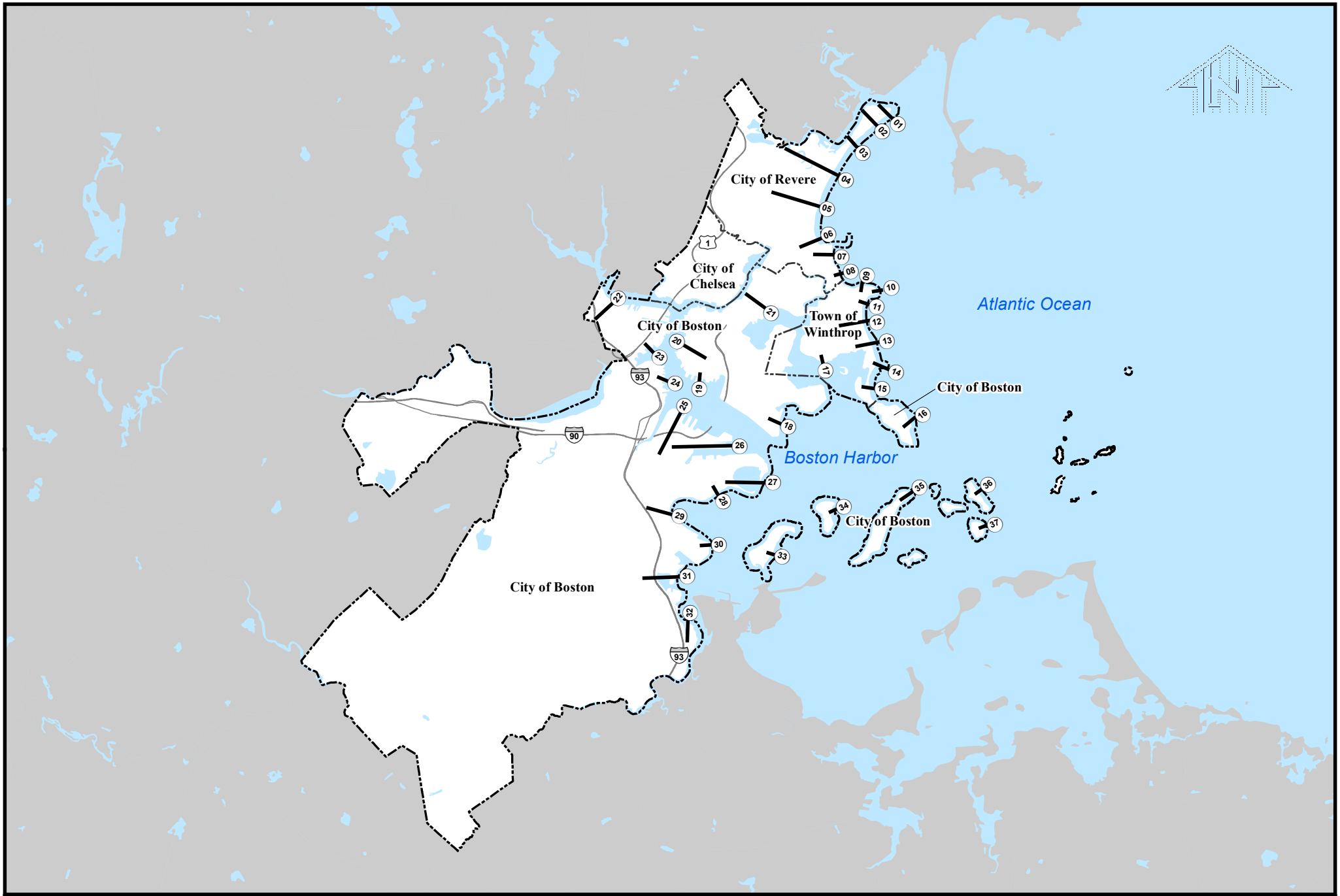

FIGURE 2

FEDERAL EMERGENCY MANAGEMENT AGENCY

SUFFOLK COUNTY, MA

(ALL JURISDICTIONS)

APPROXIMATE SCALE

0 2 4 6 8 10 Miles

TRANSECT LOCATION MAP

The results of the coastal analysis using detailed methods are summarized in Table 12, "Transect Data," which provides the flood hazard zone and base flood elevations for each coastal transect, along with the 10-, 2-, 1- and 0.2-percent-annual-chance flood stillwater elevations from the Belle Island Inlet, Boston Harbor, Dorchester Bay and the Pines, Chelsea, Charles, and Neponset River flooding sources, including effects of wave setup where applicable.

TABLE 12 – TRANSECT DATA

TRANSECT	STILLWATER ELEVATIONS (FEET NAVD88[3]) 10-PERCENT-ANNUAL CHANCE	2-PERCENT-ANNUAL-CHANCE	1-PERCENT-ANNUAL-CHANCE	0.2-PERCENT-ANNUAL-CHANCE	TOTAL WATER LEVEL[1] 1-PERCENT-ANNUAL-CHANCE	ZONE	BASE FLOOD ELEVATION[2] (FEET NAVD 88[3])
1	*	*	9.2	10.0	9.7	VE AE	12, 13 10,11
2	*	*	9.2	10.0	10.1	VE AE	13, 15 10,11
3	*	*	9.2	10.0	11.0	VE AE	15 10, 11, 12, 14
4	*	*	9.2	10.0	11.0	VE AE	10, 15, 16 8, 9, 10, 11, 12
5	*	*	9.2	10.0	11.1	VE AE	14, 16 11, 12
6	*	*	9.2	10.0	11.1	VE AE	14, 16, 17 11, 12
7	*	*	9.8	11.2	12.9	VE AH	22 6
8	*	*	9.2	10.0	11.2	VE AE	15 11, 12

*Data not available.
[1]Including stillwater elevation and effects of wave setup.
[2]Due to map scale limitations, base flood elevations shown on the FIRM represent average elevations for the zones depicted.
[3]North American Vertical Datum of 1988

Richard Latini

From: Bogdan, Kerry <Kerry.Bogdan@fema.dhs.gov>
Sent: Tuesday, September 27, 2016 12:31 PM
To: Richard Latini
Subject: RE: Flood Study Question

Hi Rick,

Yes, this new BFE is resultant from a recent update to the coastal study for Suffolk Co. The maps and FIS went effective 3/16/2016.

Please let me know if you have further questions.
Best Regards,
Kerry

Kerry Bogdan
Senior Engineer
Department of Homeland Security
Federal Emergency Management Agency
99 High Street 6th Floor
Boston, MA 02110
(P) 617.956.7576 (F) 617.956.7574

From: Richard Latini [mailto:rlatini@hshassoc.com]
Sent: Tuesday, September 27, 2016 11:53 AM
To: Bogdan, Kerry <Kerry.Bogdan@fema.dhs.gov>
Subject: Flood Study Question

Kerry,

We are working on a project at 205 Revere Beach Parkway. It is located within a flood plain where the base flood elevation was significantly raised on the latest FIRM (attached). We are trying to confirm if the flood elevation is based on coastal flooding. It appears that way from the FIRM and Flood Study.

If you want to discuss, please let me know a good time to call you.

Thank you for your help.

Rick

Richard E. Latini, P.E., LEEDGreen Assoc.
HOWARD STEIN HUDSON
Engineers + Planners
direct: 617.348.3305 office: 617.482.7080
11 Beacon Street, Suite 1010, Boston, MA 02108
www.hshassoc.com Facebook LinkedIn

HOWARD STEIN HUDSON

11 Beacon Street, Suite 1010
Boston, Massachusetts 02108
617.482.7080

www.hshassoc.com

NOTICE OF INTENT
PERMIT SET
205 REVERE BEACH PARKWAY
REVERE, MA

SHEET INDEX

SHEET C0.00	COVER SHEET
SHEET C1.00	SITE PREPARATION PLAN
SHEET C1.01	SITE PREPARATION PLAN
SHEET C2.00	LAYOUT & MATERIALS PLAN
SHEET C2.01	LAYOUT & MATERIALS PLAN
SHEET C2.02	LAYOUT & MATERIALS PLAN
SHEET C3.00	GRADING & UTILITIES PLAN
SHEET C3.01	GRADING & UTILITIES PLAN
SHEET C3.02	GRADING & UTILITIES PLAN
SHEET C4.00	SITE DETAILS
SHEET C4.01	SITE DETAILS
SHEET C4.02	SITE DETAILS
SHEET C4.03	SITE DETAILS

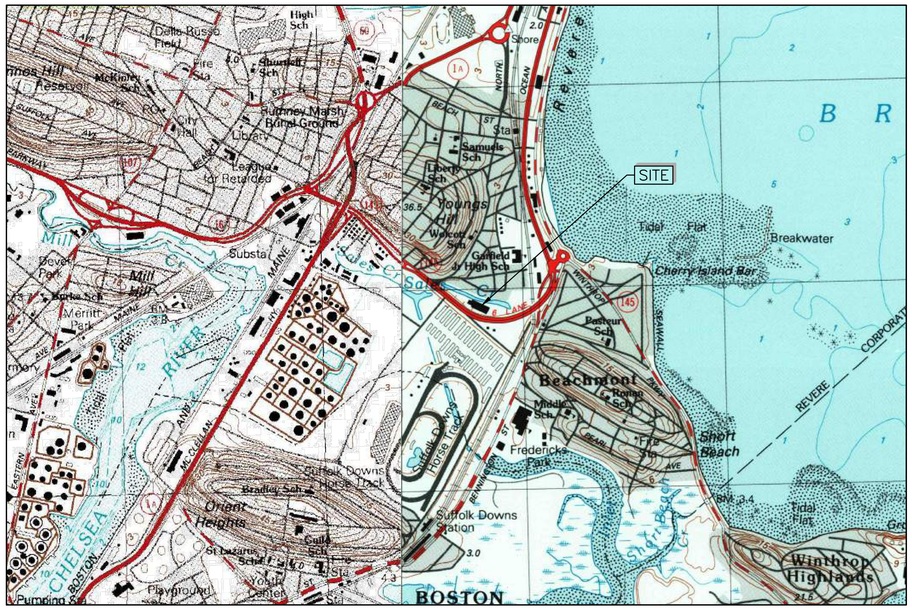

LOCUS MAP
1"=1,000'

HOWARD STEIN HUDSON
11 Beacon Street, Suite 1010
Boston, MA 02108
www.hshassoc.com

PREPARED FOR:

205 REVERE BEACH PARKWAY PARTNERS, LLC
C/O GATE RESIDENTIAL
265 FRANKLIN STREET, 6TH FLOOR
BOSTON, MA 02110
T: (617) 904-7000

205 REVERE BEACH PARKWAY
REVERE, MA 02151

REVISIONS:

NO	BY	DATE	DESCRIPTION

COMMONWEALTH OF MASSACHUSETTS
RICHARD E. LATINI
CIVIL
No. 41033
REGISTERED PROFESSIONAL ENGINEER
12/22/16

NOI PERMIT SET

COVER SHEET

DATE:	12/22/16
PROJECT NUMBER:	15040

C0.00

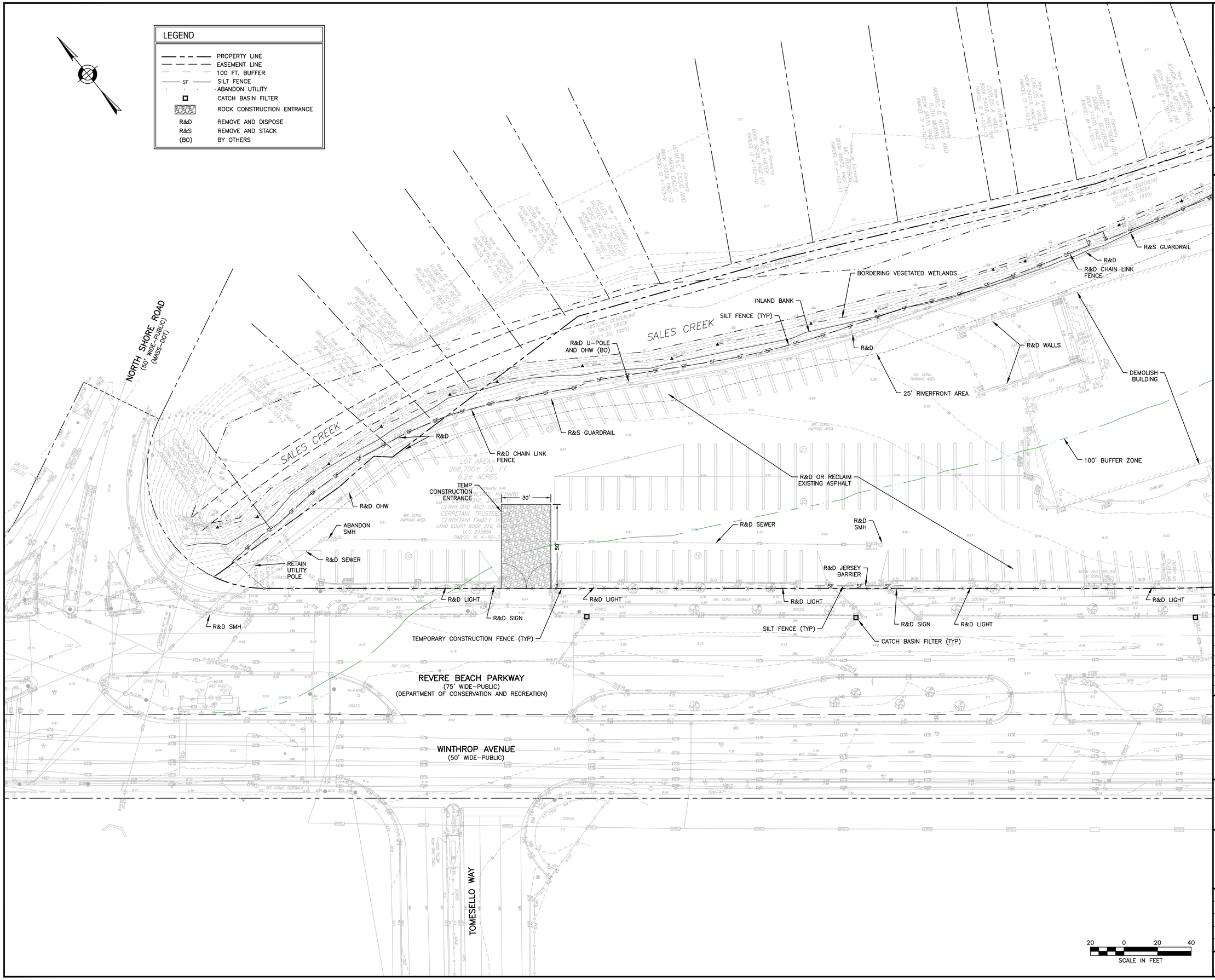

HOWARD STEIN HUDSON
11 Beacon Street, Suite 1010
Boston, MA 02108
www.hshassoc.com

PREPARED FOR:
205 REVERE BEACH PARKWAY PARTNERS, LLC
C/O GATE RESIDENTIAL
265 FRANKLIN STREET, 6TH FLOOR
BOSTON, MA 02110
T: (617) 904-7000

205 REVERE BEACH PARKWAY
REVERE, MA 02151

REVISIONS:

NO	BY	DATE	DESCRIPTION

COMMONWEALTH OF MASSACHUSETTS
RICHARD E. LATINI
CIVIL
No. 41033
12/22/16

NOI PERMIT SET

SITE PREPARATION PLAN

DATE:	12/22/16
PROJECT NUMBER:	15040
DESIGNED BY:	HH
DRAWN BY:	HV
CHECKED BY:	RL

C1.00

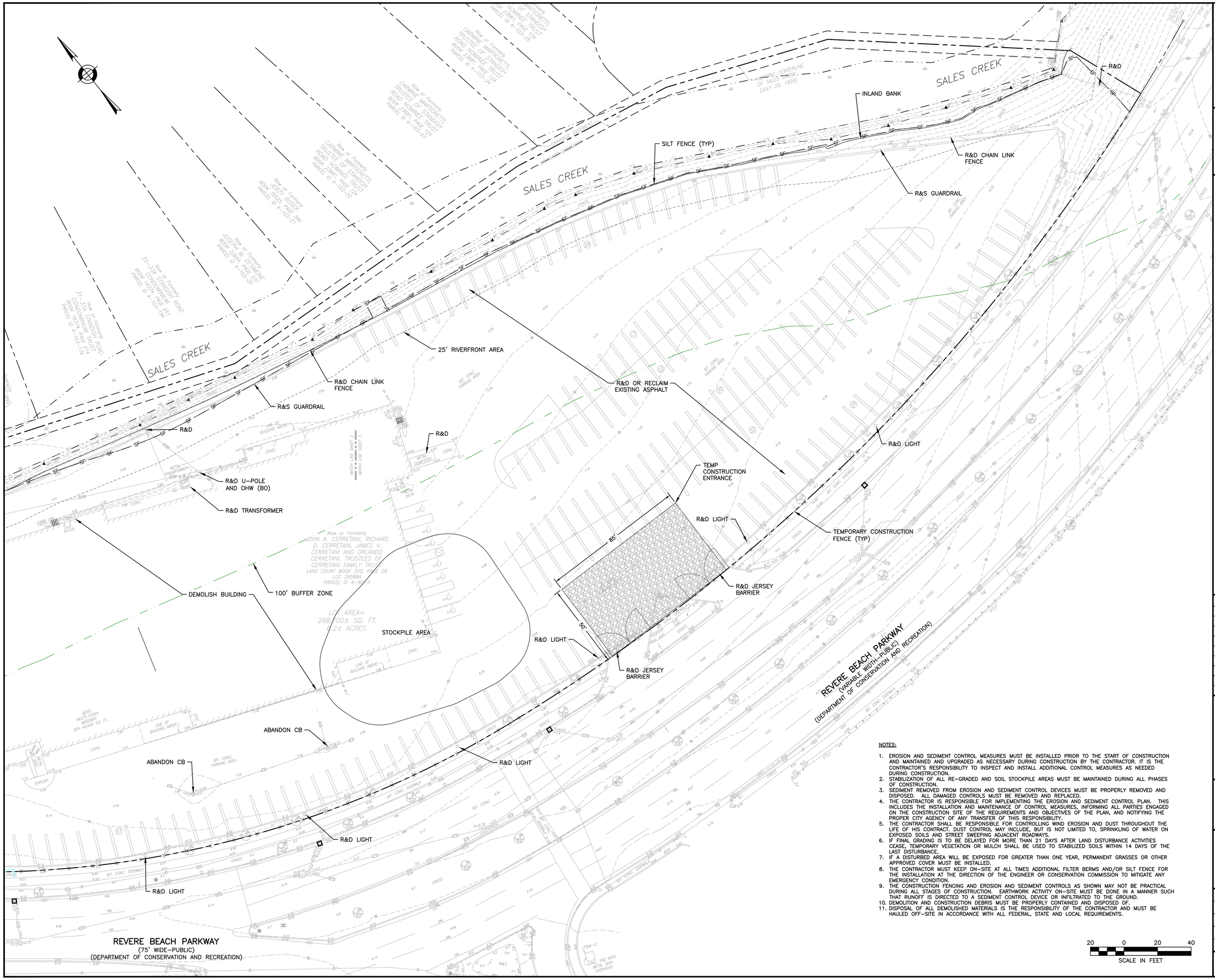

NOTES:

1. EROSION AND SEDIMENT CONTROL MEASURES MUST BE INSTALLED PRIOR TO THE START OF CONSTRUCTION AND MAINTAINED AND UPGRADED AS NECESSARY DURING CONSTRUCTION BY THE CONTRACTOR. IT IS THE CONTRACTOR'S RESPONSIBILITY TO INSPECT AND INSTALL ADDITIONAL CONTROL MEASURES AS NEEDED DURING CONSTRUCTION.
2. STABILIZATION OF ALL RE-GRADED AND SOIL STOCKPILE AREAS MUST BE MAINTAINED DURING ALL PHASES OF CONSTRUCTION.
3. SEDIMENT REMOVED FROM EROSION AND SEDIMENT CONTROL DEVICES MUST BE PROPERLY REMOVED AND DISPOSED. ALL DAMAGED CONTROLS MUST BE REMOVED AND REPLACED.
4. THE CONTRACTOR IS RESPONSIBLE FOR IMPLEMENTING THE EROSION AND SEDIMENT CONTROL PLAN. THIS INCLUDES THE INSTALLATION AND MAINTENANCE OF CONTROL MEASURES, INFORMING ALL PARTIES ENGAGED ON THE CONSTRUCTION SITE OF THE REQUIREMENTS AND OBJECTIVES OF THE PLAN, AND NOTIFYING THE PROPER CITY AGENCY OF ANY TRANSFER OF THIS RESPONSIBILITY.
5. THE CONTRACTOR SHALL BE RESPONSIBLE FOR CONTROLLING WIND EROSION AND DUST THROUGHOUT THE LIFE OF HIS CONTRACT. DUST CONTROL MAY INCLUDE, BUT IS NOT LIMITED TO, SPRINKLING OF WATER ON EXPOSED SOILS AND STREET SWEEPING ADJACENT ROADWAYS.
6. IF FINAL GRADING IS TO BE DELAYED FOR MORE THAN 21 DAYS AFTER LAND DISTURBANCE ACTIVITIES CEASE, TEMPORARY VEGETATION OR MULCH SHALL BE USED TO STABILIZED SOILS WITHIN 14 DAYS OF THE LAST DISTURBANCE.
7. IF A DISTURBED AREA WILL BE EXPOSED FOR GREATER THAN ONE YEAR, PERMANENT GRASSES OR OTHER APPROVED COVER MUST BE INSTALLED.
8. THE CONTRACTOR MUST KEEP ON-SITE AT ALL TIMES ADDITIONAL FILTER BERMS AND/OR SILT FENCE FOR THE INSTALLATION AT THE DIRECTION OF THE ENGINEER OR CONSERVATION COMMISSION TO MITIGATE ANY EMERGENCY CONDITION.
9. THE CONSTRUCTION FENCING AND EROSION AND SEDIMENT CONTROLS AS SHOWN MAY NOT BE PRACTICAL DURING ALL STAGES OF CONSTRUCTION. EARTHWORK ACTIVITY ON-SITE MUST BE DONE IN A MANNER SUCH THAT RUNOFF IS DIRECTED TO A SEDIMENT CONTROL DEVICE OR INFILTRATED TO THE GROUND.
10. DEMOLITION AND CONSTRUCTION DEBRIS MUST BE PROPERLY CONTAINED AND DISPOSED OF.
11. DISPOSAL OF ALL DEMOLISHED MATERIALS IS THE RESPONSIBILITY OF THE CONTRACTOR AND MUST BE HAULED OFF-SITE IN ACCORDANCE WITH ALL FEDERAL, STATE AND LOCAL REQUIREMENTS.

20 0 20 40
SCALE IN FEET

HOWARD STEIN HUDSON
11 Beacon Street, Suite 1010
Boston, MA 02108
www.hshassoc.com

PREPARED FOR:

205 REVERE BEACH PARKWAY PARTNERS, LLC
C/O GATE RESIDENTIAL
265 FRANKLIN STREET, 6TH FLOOR
BOSTON, MA 02110
T: (617) 904-7000

205 REVERE BEACH PARKWAY
REVERE, MA 02151

REVISIONS:

NO	BY	DATE	DESCRIPTION

COMMONWEALTH OF MASSACHUSETTS
RICHARD E. LATINI
CIVIL
No. 41033
12/22/16

NOI PERMIT SET

SITE PREPARATION PLAN

DATE:	12/22/16
PROJECT NUMBER:	15040
DESIGNED BY:	HH
DRAWN BY:	HV
CHECKED BY:	RL

C1.01

LEGEND

SIGN	
PRECAST CONCRETE CURB (PCC)	
VERTICAL GRANITE CURB (VGC)	
VALVE	
DRAIN MANHOLE	DMH
CATCH BASIN	CB
AREA DRAIN	AD
OUTLET CONTROL STRUCTURE	OCS
MINI DRAIN MANHOLE	DMH
HYDRANT	
SEWER MANHOLE	SMH
CHAIN LINK FENCE	CLF
CROSSWALK	CW
DASHED SINGLE WHITE LINE	DSWL
DASHED DOUBLE YELLOW CENTERLINE	DDYCL
DOUBLE YELLOW CENTERLINE	DYCL
SINGLE WHITE LINE	SWL
STOP LINE	SL
CONCRETE	CONC.
EXISTING	EXIST.
TYPICAL	TYP.

NOTES:

1. MEASUREMENTS ARE TAKEN FROM FACE OF CURB OR FOUNDATION WALL.
2. REFER TO THE LANDSCAPE ARCHITECTURAL PLANS FOR LAYOUT AND MATERIALS OUTSIDE OF THE ROADWAY AND BITUMINOUS CONCRETE SURFACE PARKING AREAS.
3. MODIFICATIONS BEYOND PROJECT SITE'S PROPERTY LINE ARE SUBJECT TO MUNICIPAL AND STATE APPROVALS.

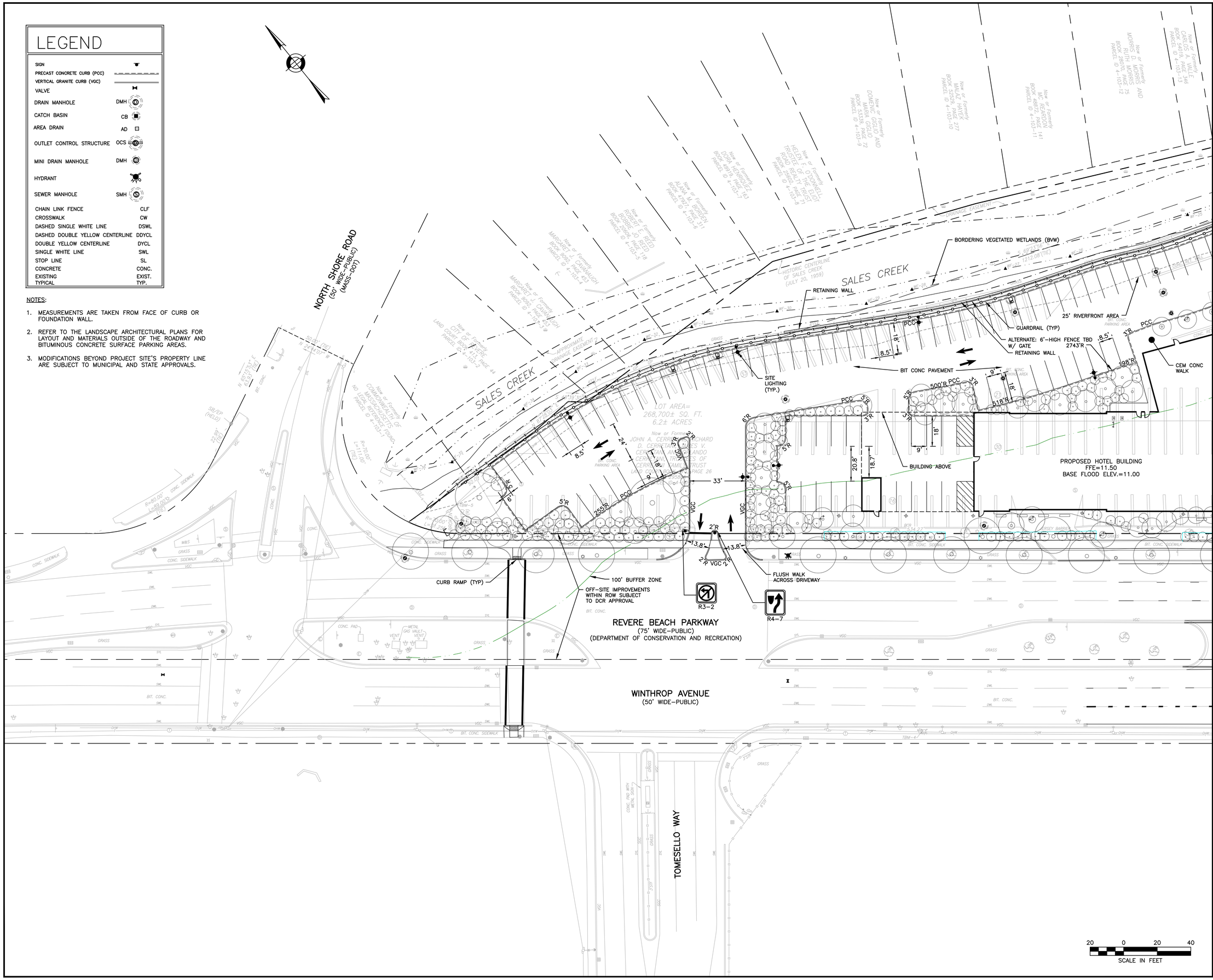

HOWARD STEIN HUDSON
11 Beacon Street, Suite 1010
Boston, MA 02108
www.hshassoc.com

PREPARED FOR:

205 REVERE BEACH PARKWAY PARTNERS, LLC
C/O GATE RESIDENTIAL
265 FRANKLIN STREET, 6TH FLOOR
BOSTON, MA 02110
T: (617) 904-7000

205 REVERE BEACH PARKWAY
REVERE, MA 02151

REVISIONS:

NO	BY	DATE	DESCRIPTION

COMMONWEALTH OF MASSACHUSETTS
RICHARD E. LATINI
CIVIL
No. 41033
12/22/16

NOI PERMIT SET

LAYOUT & MATERIALS PLAN

DATE:	12/22/16
PROJECT NUMBER:	15040
DESIGNED BY:	HH
DRAWN BY:	HV
CHECKED BY:	RL

C2.00

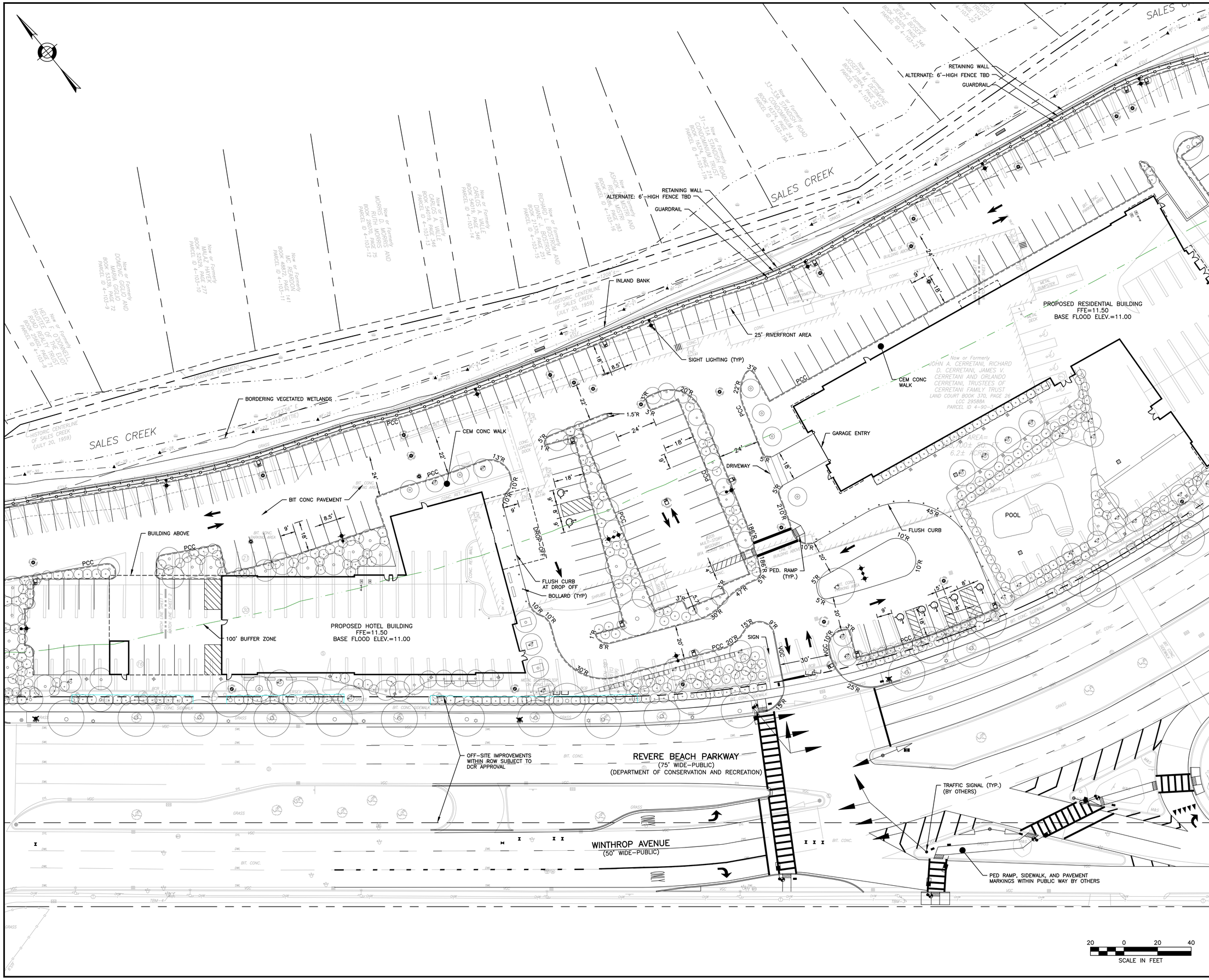

HOWARD STEIN HUDSON
11 Beacon Street, Suite 1010
Boston, MA 02108
www.hshassoc.com

PREPARED FOR:

205 REVERE BEACH PARKWAY PARTNERS, LLC
C/O GATE RESIDENTIAL
265 FRANKLIN STREET, 6TH FLOOR
BOSTON, MA 02110
T: (617) 904-7000

205 REVERE BEACH PARKWAY
REVERE, MA 02151

REVISIONS:

NO	BY	DATE	DESCRIPTION

COMMONWEALTH OF MASSACHUSETTS
RICHARD E. LATINI
CIVIL
No. 41033
12/22/16

NOI PERMIT SET

LAYOUT & MATERIALS PLAN

DATE:	12/22/16
PROJECT NUMBER:	15040
DESIGNED BY:	HH
DRAWN BY:	HV
CHECKED BY:	RL

C2.01

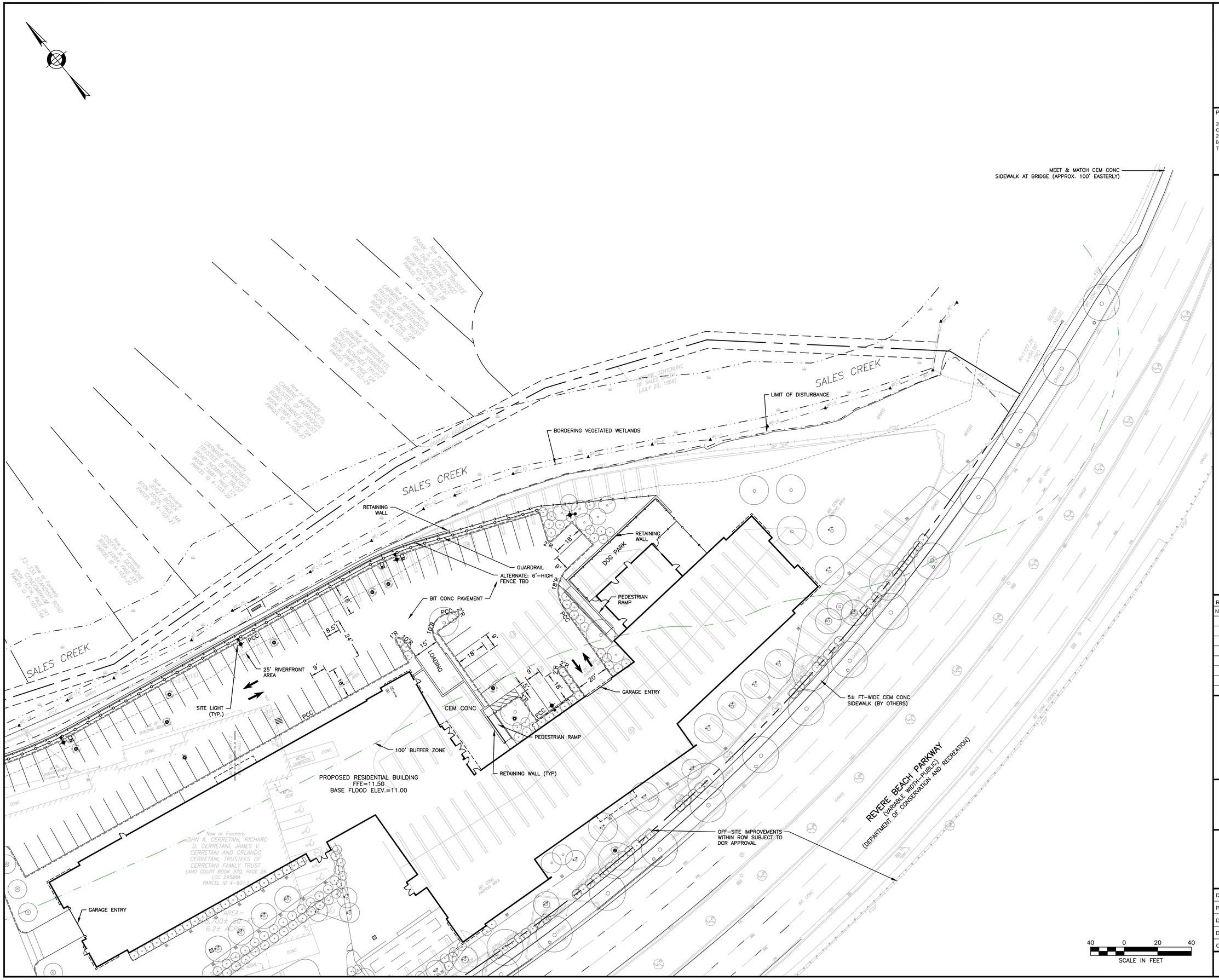

HOWARD STEIN HUDSON
11 Beacon Street, Suite 1010
Boston, MA 02108
www.hshassoc.com

PREPARED FOR:

205 REVERE BEACH PARKWAY PARTNERS, LLC
C/O GATE RESIDENTIAL
265 FRANKLIN STREET, 6TH FLOOR
BOSTON, MA 02110
T: (617) 904-7000

205 REVERE BEACH PARKWAY
REVERE, MA 02151

REVISIONS:

NO	BY	DATE	DESCRIPTION

NOI PERMIT SET

LAYOUT & MATERIALS PLAN

DATE:	12/22/16
PROJECT NUMBER:	15040
DESIGNED BY:	HH
DRAWN BY:	HV
CHECKED BY:	RL

C2.02

LEGEND

AREA DRAIN	AD
OUTLET CONTROL STRUCTURE	OCS
CATCH BASIN	CB
CEMENT-LINED DUCTILE IRON PIPE	CLDI
DRAIN MANHOLE	DMH
GATE VALVE	GV
HYDRANT	
SEWER MANHOLE	SMH
MINI DRAIN MANHOLE	DMH
S	SLOPE
EXIST	EXISTING
LF	LINEAR FEET
INV	INVERT ELEVATION
PVC	POLYVINYL CHLORIDE PIPE
RCP	REINFORCED CONCRETE PIPE
TC	TOP OF CURB
BC	BOTTOM OF CURB
WQU	WATER QUALITY UNIT
RD	ROOF DRAIN
TW	TOP OF WALL
BW	BOTTOM OF WALL
ELECTRIC DUCTBANK	E
STORM DRAIN	D
GAS LINE	G
SANITARY SEWER	S
WATER LINE	W

NOTES:

1. EXISTING TOPOGRAPHIC AND UTILITY INFORMATION SHOWN IS BASED ON A PLAN ENTITLED "EXISTING CONDITIONS PLAN OF LAND, 205 REVERE BEACH PARKWAY, REVERE, MASS.," PREPARED BY HARRY R. FELDMAN, INC., AND DATED MAY 18, 2015.
2. ELEVATIONS REFER TO NAVD 1988.
3. THE UTILITY INFORMATION SHOWN IS BASED ON BOTH A FIELD SURVEY AND PLANS OF RECORD AND IS APPROXIMATE ONLY. ALL UTILITY COMPANIES, PUBLIC AND PRIVATE, MUST BE NOTIFIED PRIOR TO CONSTRUCTION. CONTACT THE DIG SAFE CALL CENTER AT 1-888-344-7233 AT LEAST 72 HOURS PRIOR TO EXCAVATION.
4. WHERE AN EXISTING UTILITY IS FOUND TO CONFLICT WITH THE PROPOSED WORK. THE LOCATION, ELEVATION, AND SIZE OF THE UTILITY SHALL BE ACCURATELY DETERMINE WITHOUT DELAY BY THE CONTRACTOR AND THE INFORMATION FURNISHED TO THE ENGINEER FOR RESOLUTION OF THE CONFLICT.
6. PIPE MATERIAL (UNLESS OTHERWISE NOTED):
   CEMENT-LINED DUCTILE IRON PIPE (CLDI) CLASS 52
   POLYVINYL CHLORIDE PIPE (PVC) SDR 35
   REINFORCED CONCRETE PIPE (RCP) CLASS IV

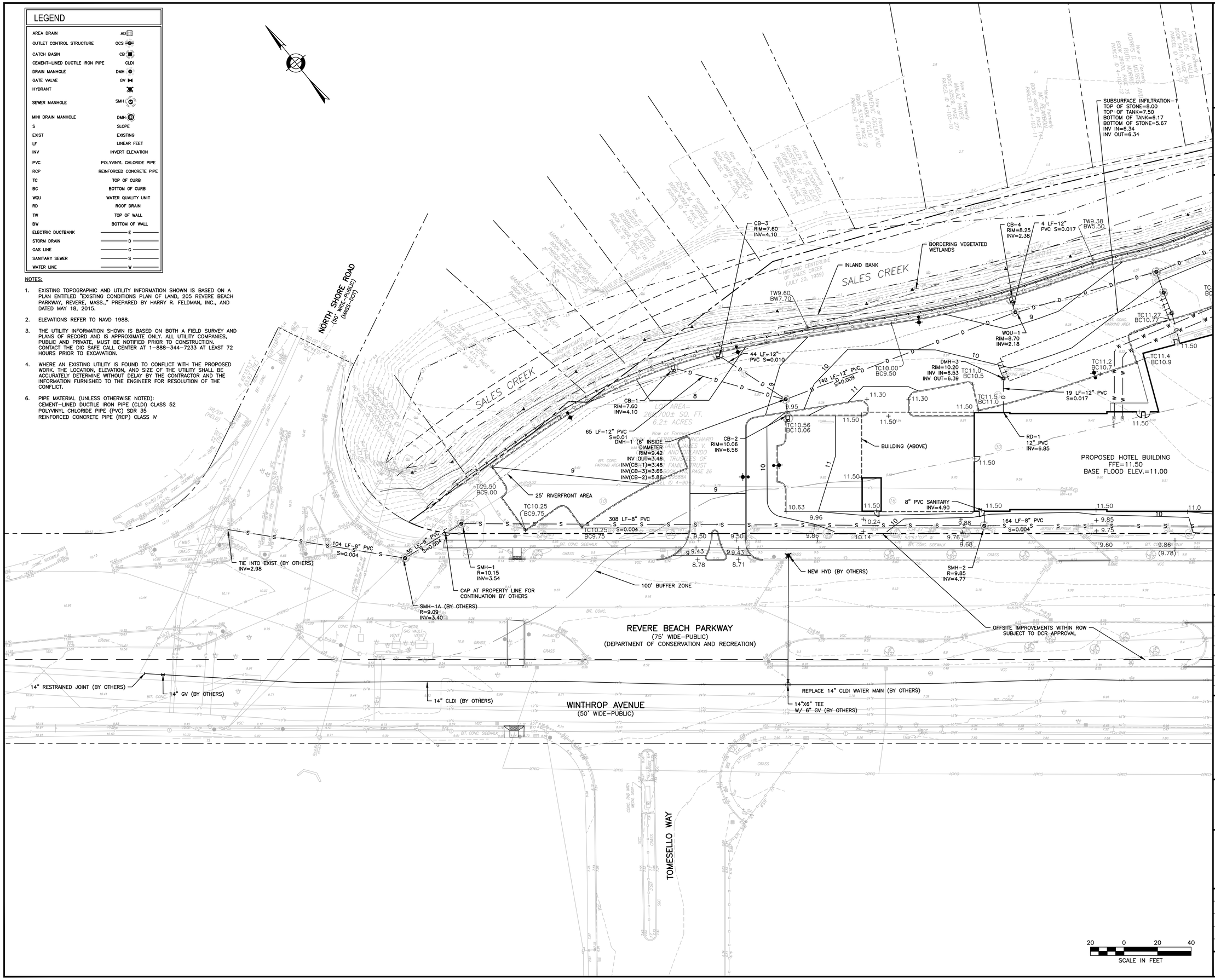

HOWARD STEIN HUDSON
11 Beacon Street, Suite 1010
Boston, MA 02108
www.hshassoc.com

PREPARED FOR:
205 REVERE BEACH PARKWAY PARTNERS, LLC
C/O GATE RESIDENTIAL
265 FRANKLIN STREET, 6TH FLOOR
BOSTON, MA 02110
T: (617) 904-7000

205 REVERE BEACH PARKWAY
REVERE, MA 02151

REVISIONS:

NO	BY	DATE	DESCRIPTION

COMMONWEALTH OF MASSACHUSETTS
RICHARD E. LATINI
CIVIL
No. 41033
REGISTERED PROFESSIONAL ENGINEER
12/22/16

NOI PERMIT SET

GRADING & UTILITIES PLAN

DATE:	12/22/16
PROJECT NUMBER:	15040
DESIGNED BY:	HH
DRAWN BY:	HV
CHECKED BY:	RL

C3.00

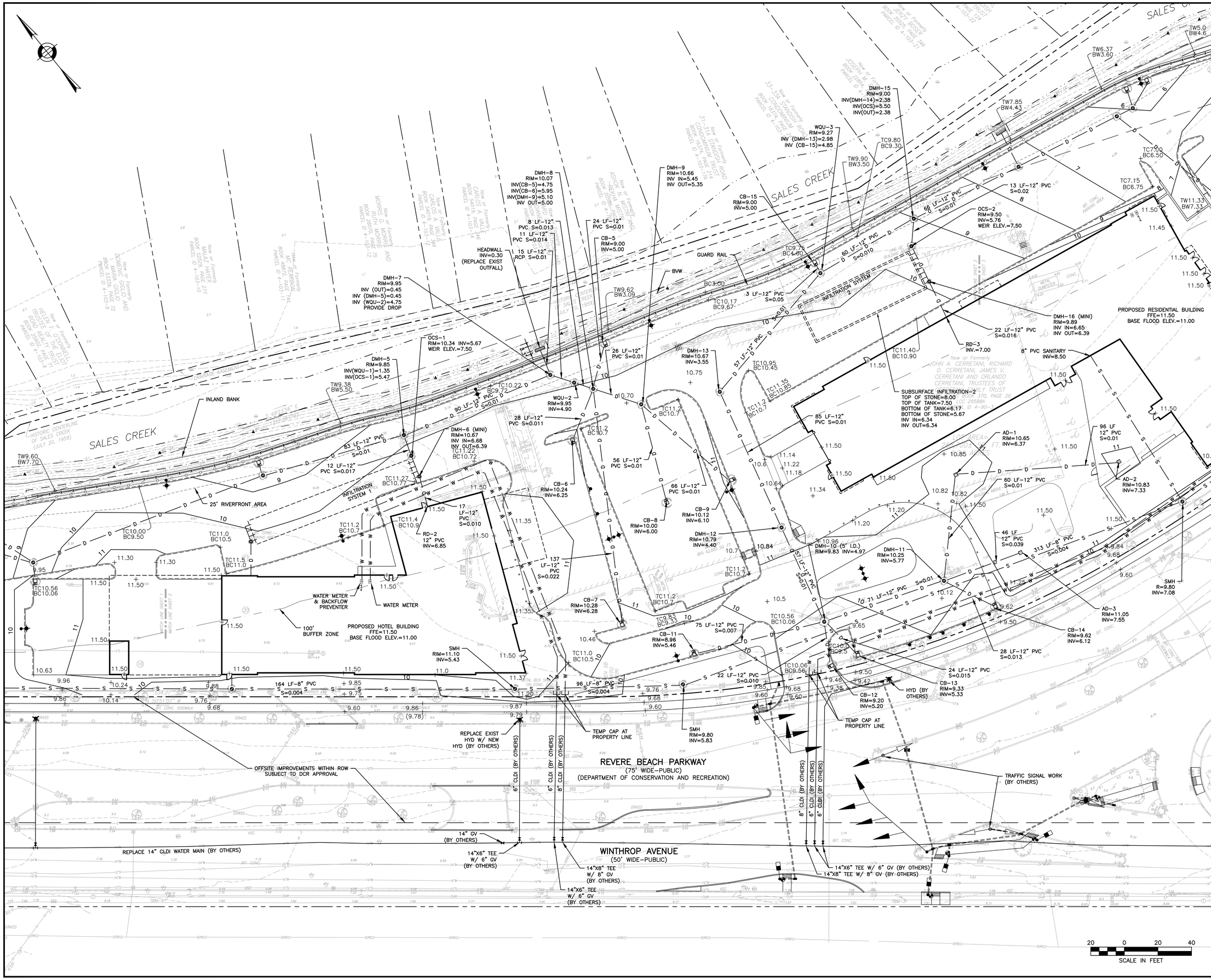

HOWARD STEIN HUDSON
11 Beacon Street, Suite 1010
Boston, MA 02108
www.hshassoc.com

PREPARED FOR:
205 REVERE BEACH PARKWAY PARTNERS, LLC
C/O GATE RESIDENTIAL
265 FRANKLIN STREET, 6TH FLOOR
BOSTON, MA 02110
T: (617) 904-7000

205 REVERE BEACH PARKWAY
REVERE, MA 02151

REVISIONS:

NO	BY	DATE	DESCRIPTION

COMMONWEALTH OF MASSACHUSETTS
RICHARD E. LATINI
CIVIL
No. 41033
12/22/16

NOI PERMIT SET

GRADING & UTILITIES PLAN

DATE:	12/22/16
PROJECT NUMBER:	15040
DESIGNED BY:	HH
DRAWN BY:	HV
CHECKED BY:	RL

C3.01

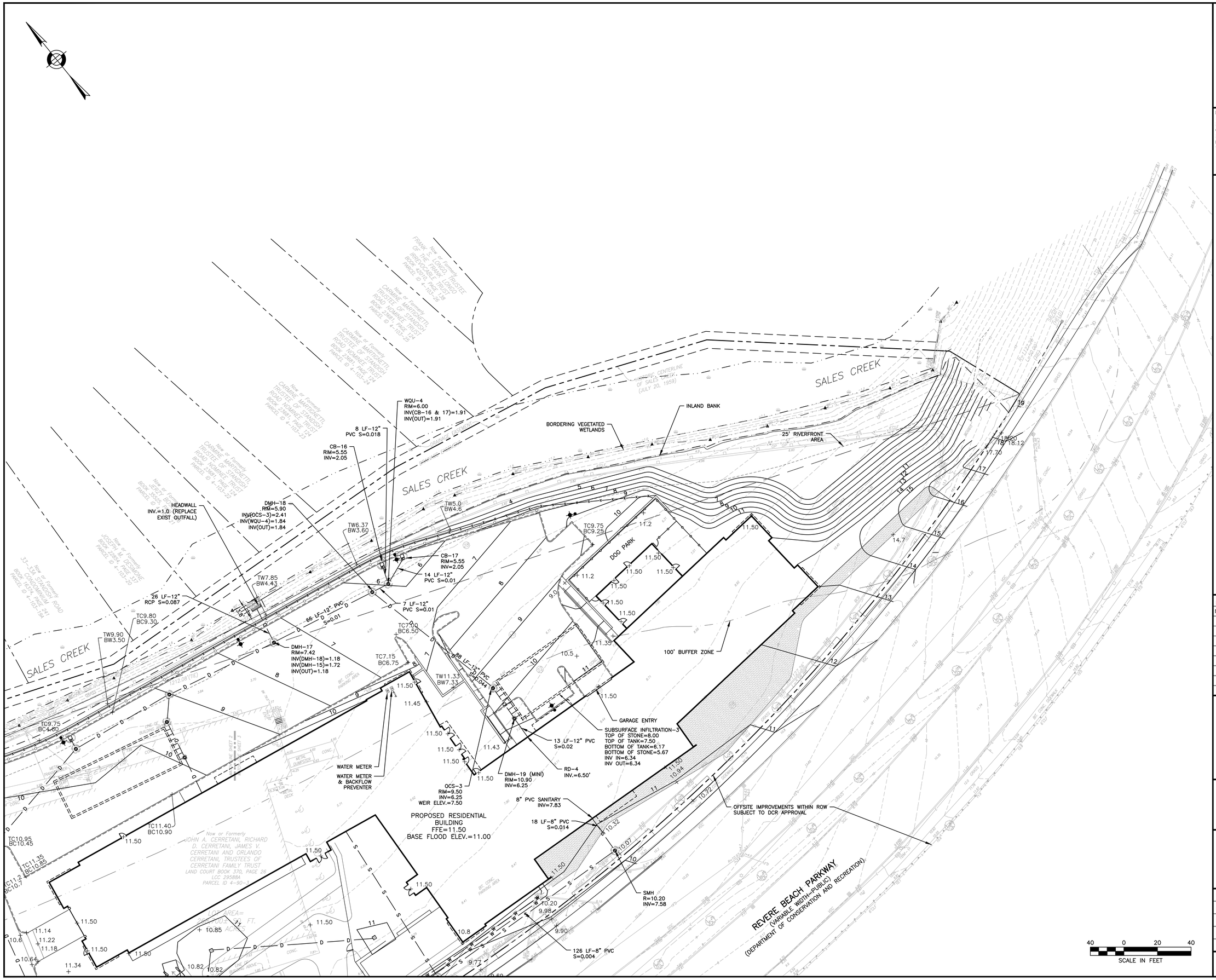

HOWARD STEIN HUDSON
11 Beacon Street, Suite 1010
Boston, MA 02108
www.hshassoc.com

PREPARED FOR:

205 REVERE BEACH PARKWAY PARTNERS, LLC
C/O GATE RESIDENTIAL
265 FRANKLIN STREET, 6TH FLOOR
BOSTON, MA 02110
T: (617) 904-7000

205 REVERE BEACH PARKWAY
REVERE, MA 02151

REVISIONS:

NO	BY	DATE	DESCRIPTION

COMMONWEALTH OF MASSACHUSETTS
RICHARD E. LATINI
CIVIL
No. 41033
12/22/16

NOI PERMIT SET

GRADING
&
UTILITIES
PLAN

DATE:	12/22/16
PROJECT NUMBER:	15040
DESIGNED BY:	HH
DRAWN BY:	HV
CHECKED BY:	RL

C3.02

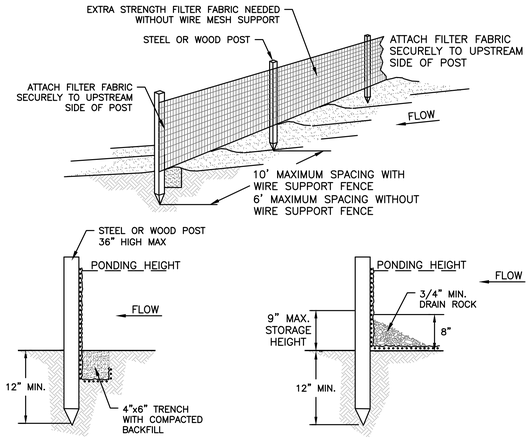

NOTES:

1. EROSION CONTROL BARRIER (HAY BALES, SILT FENCE OR EROSION STOCK) SHALL BE PLACED AROUND ALL MATERIAL STOCKPILE AREAS AND MAINTAINED AT STAGING AREAS TO ASSURE NO SILTATION ONTO PUBLIC OR PRIVATE WAYS OR PROPERTY.

SILT FENCE
NOT TO SCALE

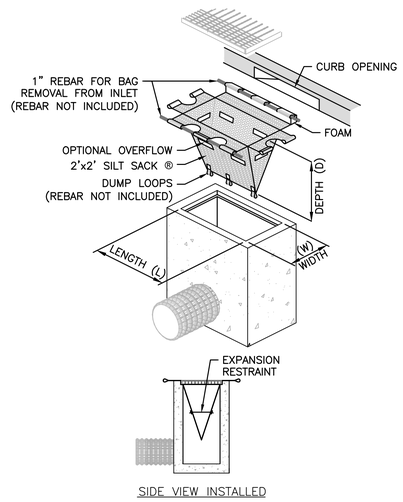

CATCH BASIN FILTER

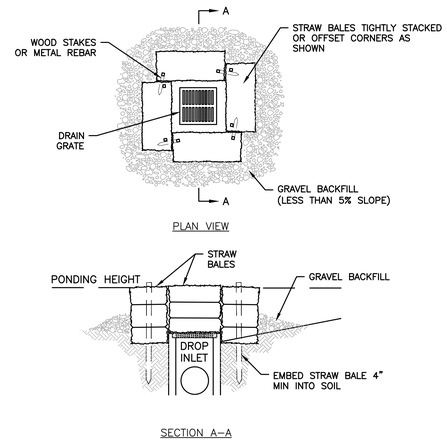

STRAW BALE & GRAVEL INLET SEDIMENT BARRIER

TEMPORARY INLET PROTECTION
NOT TO SCALE

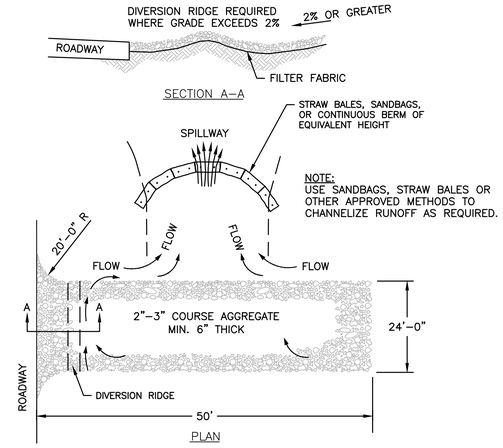

NOTES:

1. THE ENTRANCE SHALL BE MAINTAINED IN A CONDITION THAT WILL PREVENT TRACKING OR FLOWING OF SEDIMENT ONTO PUBLIC RIGHT–OF–WAYS. THIS MAY REQUIRE TOP DRESSING, REPAIR AND/OR CLEANOUT OF ANY MEASURES USED TO TRAP SEDIMENT.
2. WHEN NECESSARY, WHEELS SHALL BE CLEANED PRIOR TO ENTRANCE ONTO PUBLIC RIGHT–OF–WAY.
3. TEMPORARY CONSTRUCTION ENTRANCE SHALL BE APPLIED WHERE NECESSARY TO KEEP PUBLIC WAYS FREE OF SEDIMENT INCLUDING STAGING AREAS

STABILIZED CONSTRUCTION ENTRANCE
NOT TO SCALE

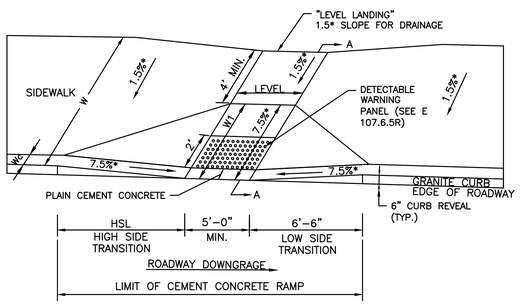

LEGEND:

HSL = HIGH SIDE TRANSITION (SEE E 107.9.0R)
W = SIDEWALK WIDTH
Wc = CURB WIDTH
W1 = PERPENDICULAR RAMP LENGTH
CC = CEMENT CONCRETE
* = TOLERANCE FOR CONSTRUCTION ±0.5%

USEABLE SIDEWALK WIDTH PER AAB = W–WC

RAMP LENGTH = W1 = W – 4"–0" MIN

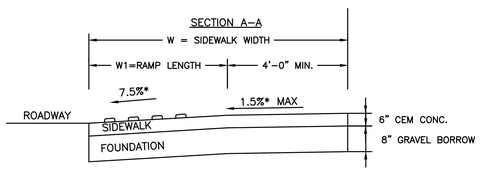

WHEELCHAIR RAMPS GREATER THAN 12'–4" SIDEWALK (E107.3.0R)
NOT TO SCALE

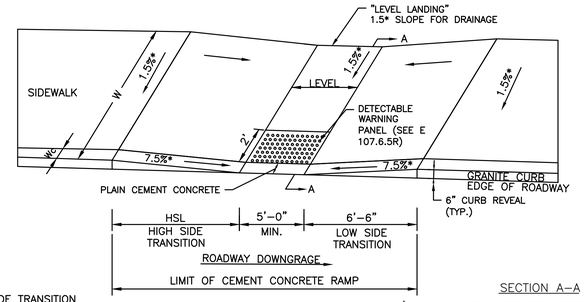

LEGEND:

HSL = HIGH SIDE TRANSITION (SEE E 107.9.0R)
W = SIDEWALK WIDTH
Wc = CURB WIDTH
W1 = PERPENDICULAR RAMP LENGTH
CC = CEMENT CONCRETE
* = TOLERANCE FOR CONSTRUCTION ±0.5%

USEABLE SIDEWALK WIDTH PER AAB = W–WC

RAMP LENGTH = W1 = W – 4"–0" MIN

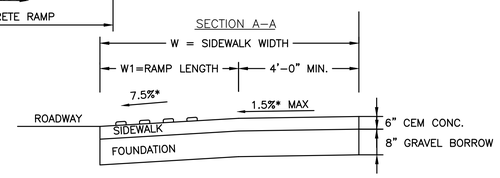

WHEELCHAIR RAMPS ON NARROW SIDEWALK WITH DETECTABLE WARNING PANEL (E107.2.1R)
NOT TO SCALE

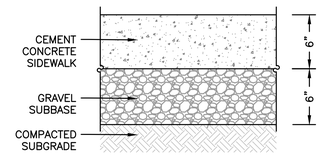

NOTES:

1. CONCRETE SIDEWALK DETAIL AND NOTES APPLY TO SIDEWALK WITHIN THE RIGHT–OF–WAY.
2. CONCRETE SHALL BE 4,000 PSI.
3. SIDEWALKS ARE TO BE RAKED FINISH WITH 3/8 INCH TROWEL JOINTS.

CEM CONC SIDEWALK SECTION DETAIL
NOT TO SCALE

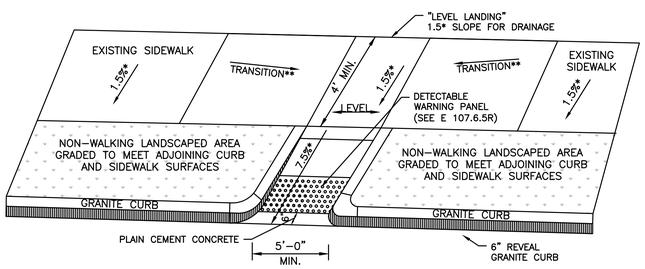

LEGEND:
* = TOLERANCE FOR CONSTRUCTION ± 0.5%
** = SEE E 107.9R FOR TRANSITION LENGTH

WHEELCHAIR RAMP WITH LANDSCAPE STRIP (E 107.6.9R)
NOT TO SCALE

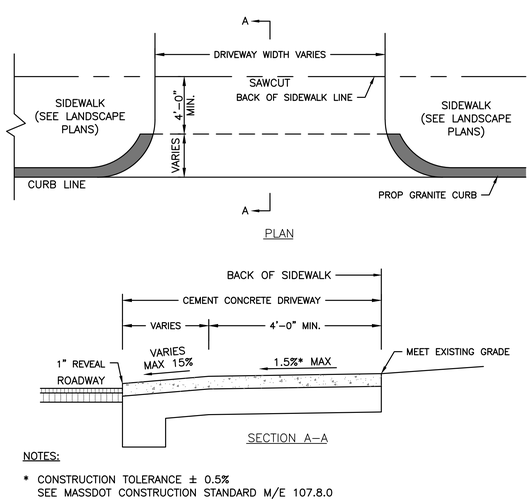

NOTES:

* CONSTRUCTION TOLERANCE ± 0.5%
SEE MASSDOT CONSTRUCTION STANDARD M/E 107.8.0

DRIVEWAY CONSTRUCTION DETAIL
NOT TO SCALE

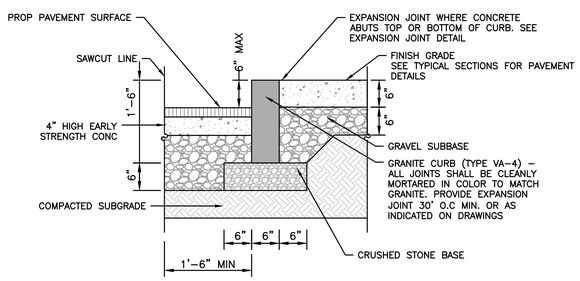

NOTE: USE 2" BIT. CONC. TOP COURSE ABOVE HIGH EARLY STRENGTH CONCRETE FOR RESETTING CURBS

VERTICAL GRANITE CURB
NOT TO SCALE

HOWARD STEIN HUDSON
11 Beacon Street, Suite 1010
Boston, MA 02108
www.hshassoc.com

PREPARED FOR:

205 REVERE BEACH PARKWAY PARTNERS, LLC
C/O GATE RESIDENTIAL
265 FRANKLIN STREET, 6TH FLOOR
BOSTON, MA 02110
T: (617) 904-7000

205 REVERE BEACH PARKWAY
REVERE, MA 02151

REVISIONS:

NO	BY	DATE	DESCRIPTION

RICHARD E. LATINI CIVIL No. 41038 COMMONWEALTH OF MASSACHUSETTS 12/22/16

NOI PERMIT SET

SITE DETAILS

DATE:	12/22/16
PROJECT NUMBER:	15040
DESIGNED BY:	HH
DRAWN BY:	PH
CHECKED BY:	RL

C4.00

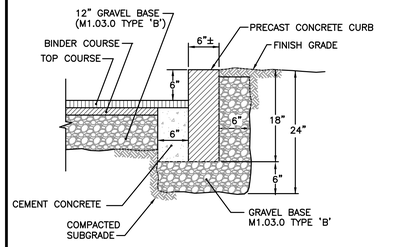

NOTE:
CURBS SHALL BE BACKED UP BY CONCRETE ANCHOR AT ALL JOINTS WHERE NOT ADJACENT TO A SIDEWALK OR OTHER STRUCTURE.

PRECAST CONCRETE CURB
NOT TO SCALE

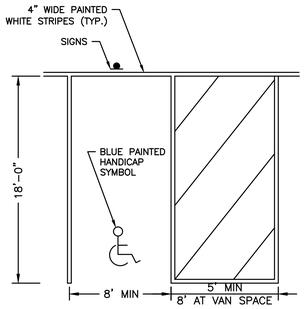

NOTE:
* GRADING WITHIN THE HANDICAP PARKING SPACE SHALL NOT EXCEED 2.0% IN ANY DIRECTION.

TYPICAL HANDICAP PARKING SPACE
NOT TO SCALE

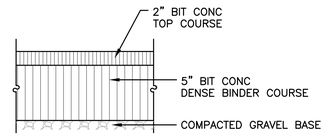

TRENCH PATCH DETAIL
NOT TO SCALE

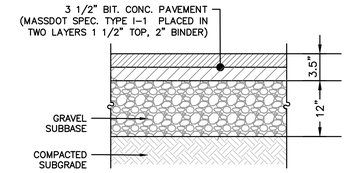

FULL DEPTH PARKING LOT SECTION DETAIL
NOT TO SCALE

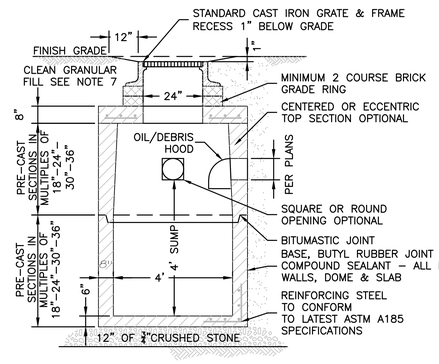

NOTES:

1) BASE SECTION SHALL BE MONOLITHIC WITH 48-INCH INSIDE DIAMETER.
2) ALL SECTIONS SHALL BE DESIGNED FOR HS-20 LOADING.
3) CONCRETE SHALL BE COMPRESSIVE STRENGTH 4000psi TYPE II CEMENT. PRE-CAST REINFORCED CONCRETE SHALL BE ASTM C-478.
4) ALL EXTERIOR SURFACES SHALL BE GIVEN TWO COATS OF BITUMINOUS WATER-PROOFING MATERIAL.
5) STANDARD GRATE & FRAME SHALL BE SET IN FULL MORTAR BED. ADJUST TO GRADE WITH CLAY BRICK AND MORTAR (2 BRICK COURSES TYPICALLY, 5 COURSE MAXIMUM).
6) GRATE AND FRAME SHALL BE LEBARON CAST IRON OR ENGINEER APPROVED EQUAL. ALL GRATES TO BE BICYCLE SAFE.
7) CLEAN GRANULAR FILL SHALL BE FREE FROM FROM ORGANIC MATTER, LARGE STONES, STUMPS, MASONRY, FROZEN EARTH, WOOD, TREE BRANCHES & WASTE CONSTRUCTION MATERIAL. PLACE AND MECHANICALLY COMPACT IN 12" LIFTS TO 95% OF MAX. STANDARD PROCTOR COMPACTION.
8) TRENCH SHEETING & BRACING TO BE SUPPLIED AS REQUIRED.
9) ALL CATCH BASIN OUTLETS TO BE EQUIPPED WITH OIL/DEBRIS SEPARATION HOOD, AS REQUIRED BY CITY/TOWN.

FLAT TOP CATCH BASIN
NOT TO SCALE

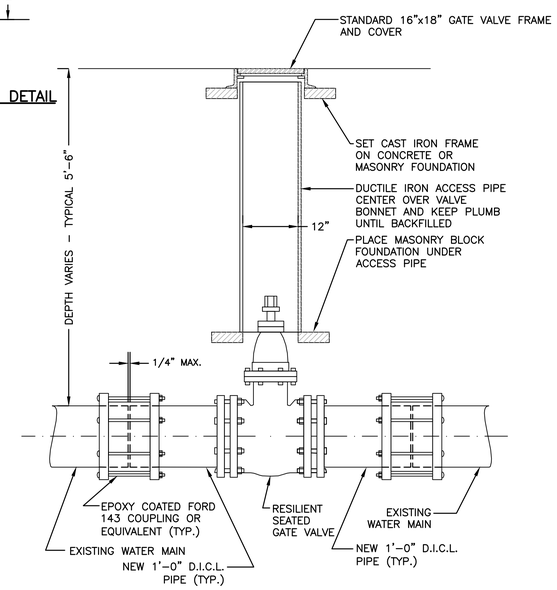

NOTE:
1. ALL EXCAVATION AND BACKFILLING AND PAVING SHALL BE IN ACCORDANCE WITH THE CITY OF REVERE REQUIREMENTS.

TYPICAL GATE VALVE INSTALLATION
NOT TO SCALE

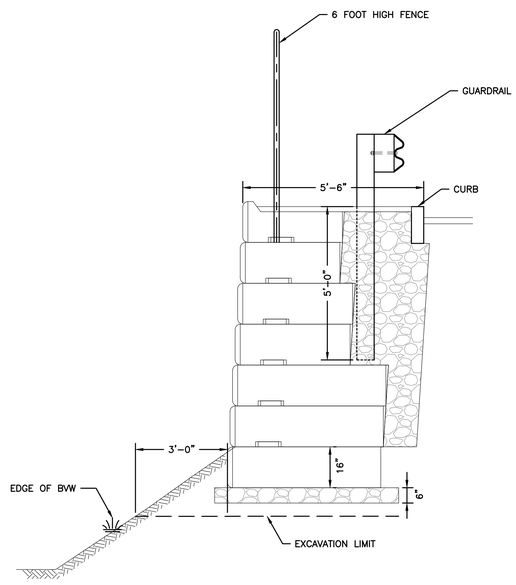

TYPICAL SECTION THROUGH RETAINING WALL
NOT TO SCALE

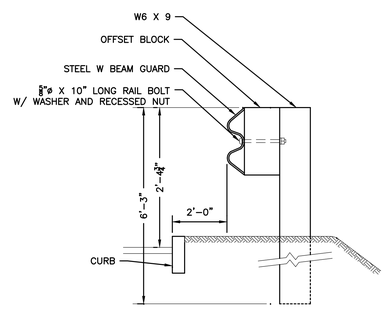

GUARD RAIL
NOT TO SCALE

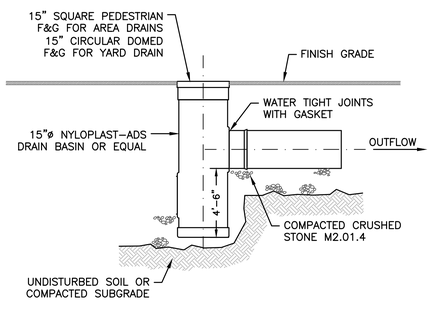

NOTE: STRUCTURE MUST BE ADEQUATE FOR H-10 MIN. LOADING

AREA AND YARD DRAIN
NOT TO SCALE

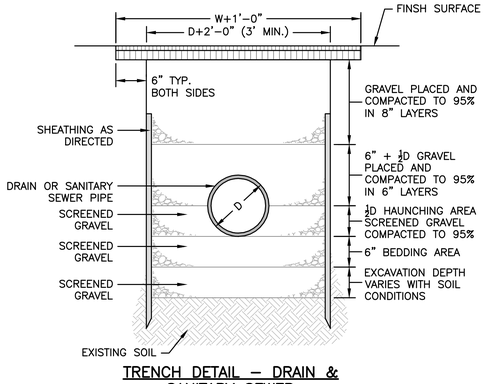

TRENCH DETAIL - DRAIN & SANITARY SEWER
NOT TO SCALE

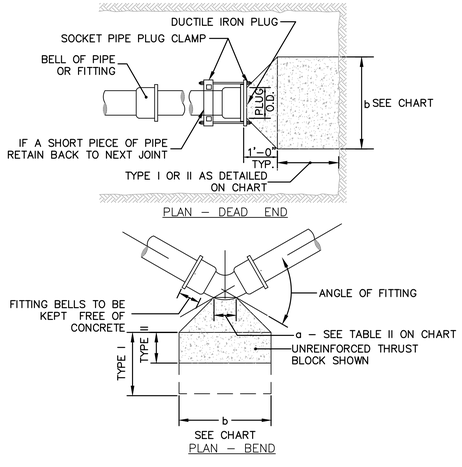

THRUST BLOCK
NOT TO SCALE

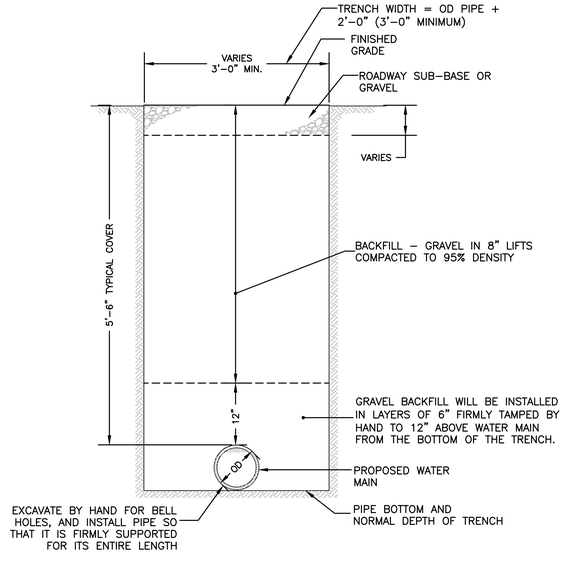

TRENCH DETAIL - WATER MAIN
NOT TO SCALE

HOWARD STEIN HUDSON
11 Beacon Street, Suite 1010
Boston, MA 02108
www.hshassoc.com

PREPARED FOR:
205 REVERE BEACH PARKWAY PARTNERS, LLC
C/O GATE RESIDENTIAL
265 FRANKLIN STREET, 6TH FLOOR
BOSTON, MA 02110
T: (617) 904-7000

205 REVERE BEACH PARKWAY
REVERE, MA 02151

REVISIONS:

NO	BY	DATE	DESCRIPTION

COMMONWEALTH OF MASSACHUSETTS
RICHARD E. LATINI
CIVIL
No. 41033
12/22/16

NOI PERMIT SET

SITE DETAILS

DATE:	12/22/16
PROJECT NUMBER:	15040
DESIGNED BY:	HH
DRAWN BY:	PH
CHECKED BY:	RL

C4.01

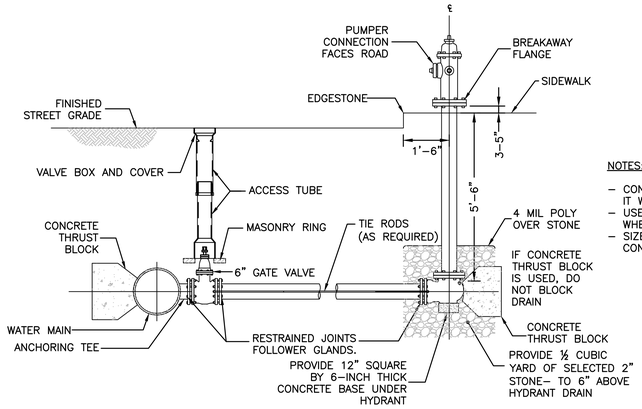

NOTES:

- CONCRETE THRUST BLOCK TO BE USED ONLY WHERE IT WILL BEAR ON UNDISTURBED EARTH.
- USE RESTRAINED JOINT FOLLOWER GLANDS, OR TIE RODS. WHERE CONCRETE THRUST BLOCK IS UNACCEPTABLE.
- SIZE OF BLOCK OR FITTING TO BE DESIGNED FOR SPECIFIC CONDITIONS, OR ANY NECESSARY BENDS.

TYPICAL FIRE HYDRANT CONNECTION FOR HIGH OR LOW SERVICE LINE

NOT TO SCALE

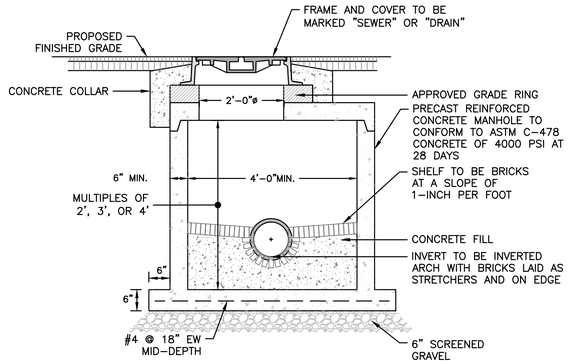

SHALLOW MANHOLE

NOT TO SCALE

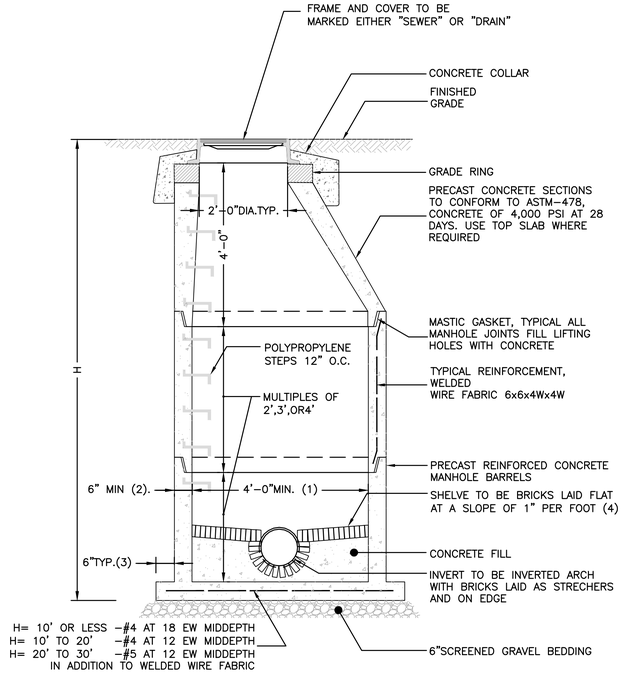

NOTES:

1. 5'-0" DIAMETER FOR ALL MANHOLE DEPTHS GREATER THAN 20 FEET OR WHEN ORDERED BY THE ENGINEER.
2. 6 INCH MIN. WALL THICKNESS AND 7 INCH MIN. BASE THICKNESS WITH 5'-0" DIAMETER MANHOLES.
3. 6 INCH LIP OPTIONAL UNLESS OTHERWISE NOTED. CONCRETE INVERT AND SHELF MAY BE SUBSTITUTED IN STORM DRAIN MANHOLES AS DIRECTED BY THE ENGINEER.

PRECAST CONCRETE MANHOLE

NOT TO SCALE

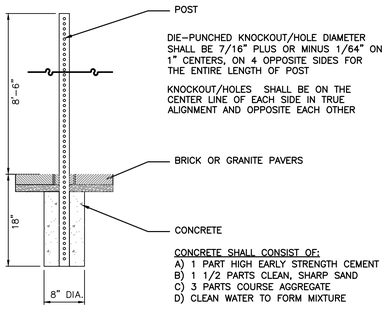

CONCRETE SHALL CONSIST OF:
A) 1 PART HIGH EARLY STRENGTH CEMENT
B) 1 1/2 PARTS CLEAN, SHARP SAND
C) 3 PARTS COURSE AGGREGATE
D) CLEAN WATER TO FORM MIXTURE

10'-2" SQUARE SIGN POST

NOT TO SCALE

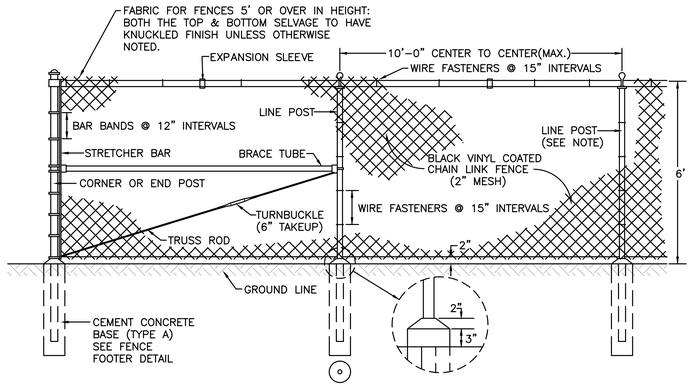

NOTE: LINE POSTS TO BE SPACED 10'-0" CENTER TO CENTER MAXIMUM EXCEPT ON CURVES WHERE THEY SHALL BE SPACED AS FOLLOWS:

RADIUS OF CURVE	MAXIMUM SPACING
100' OR LESS	5'-0" C. TO C.
100' TO 200'	6'-0" C. TO C.
200' TO 500'	8'-0" C. TO C.

CHAIN LINK FENCE

NOT TO SCALE

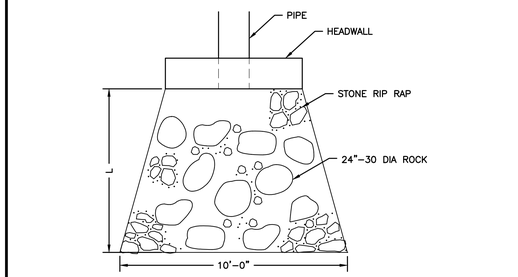

PLAN VIEW

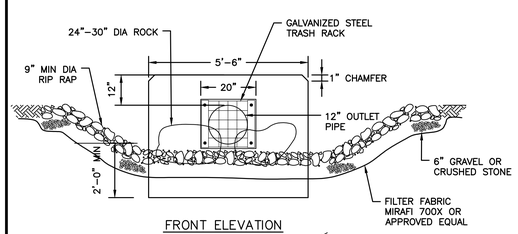

FRONT ELEVATION

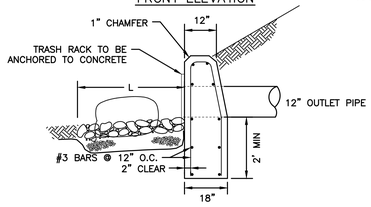

END ELEVATION

NOTE: SEE PLANS FOR LENGTH (L)

CONCRETE HEADWALL

NOT TO SCALE

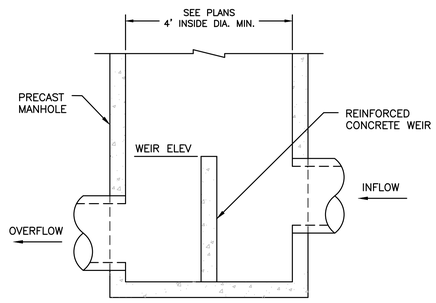

SECTION

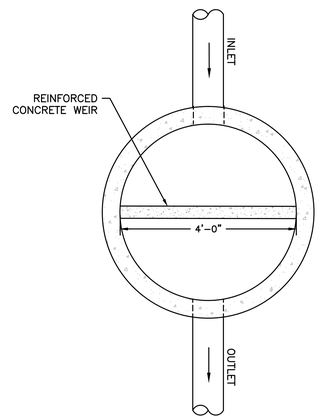

PLAN

NOTES:

1. 6 INCH MIN. WALL THICKNESS AND 7 INCH MIN. BASE THICKNESS WITH 5'-0" DIAMETER MANHOLES.
2. 6 INCH LIP OPTIONAL UNLESS OTHERWISE NOTED. CONCRETE INVERT AND SHELF MAY BE SUBSTITUTED IN STORM DRAIN MANHOLES AS DIRECTED BY THE ENGINEER.
3. CONTRACTOR TO SUBMIT METHOD OF BRACING WEIR.

OUTLET CONTROL STRUCTURE

NOT TO SCALE

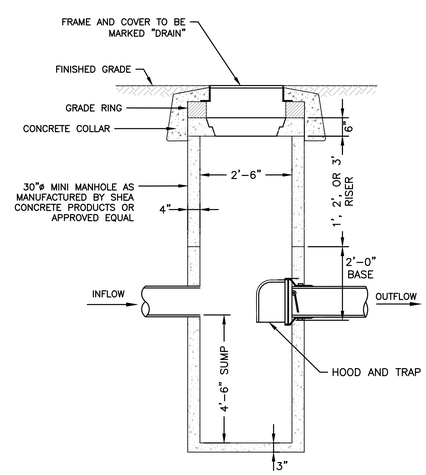

SECTION VIEW

NOTES:

1. CONCRETE: 5000 PSI MINIMUM AFTER 28 DAYS.
2. DESIGNED FOR H-20 LOADING.

MINI MANHOLE

NOT TO SCALE

HOWARD STEIN HUDSON
11 Beacon Street, Suite 1010
Boston, MA 02108
www.hshassoc.com

PREPARED FOR:

205 REVERE BEACH PARKWAY PARTNERS, LLC
C/O GATE RESIDENTIAL
265 FRANKLIN STREET, 6TH FLOOR
BOSTON, MA 02110
T: (617) 904-7000

205 REVERE BEACH PARKWAY

REVERE, MA 02151

REVISIONS:

NO	BY	DATE	DESCRIPTION

COMMONWEALTH OF MASSACHUSETTS
RICHARD E. LATINI
CIVIL
No. 41033
12/22/16

NOI PERMIT SET

SITE DETAILS

DATE:	12/22/16
PROJECT NUMBER:	15040
DESIGNED BY:	HH
DRAWN BY:	PH
CHECKED BY:	RL

C4.02

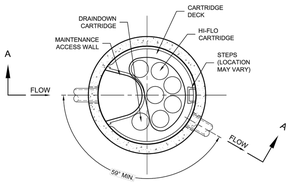

PLAN VIEW

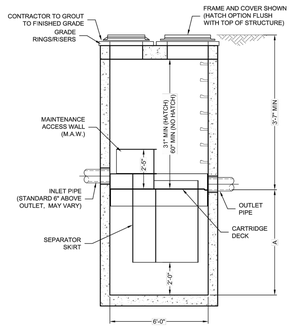

JELLYFISH (WQU)

NOT TO SCALE

JELLYFISH DESIGN NOTES

JELLYFISH TREATMENT CAPACITY IS A FUNCTION OF THE CARTRIDGE SELECTION AND THE NUMBER OF CARTRIDGES. THE STANDARD MANHOLE STYLE IS SHOWN. .072" MANHOLE JELLYFISH PEAK TREATMENT CAPACITY IS 1.16 CFS. IF THE SITE CONDITIONS EXCEED 1.16 CFS AN UPSTREAM BYPASS STRUCTURE IS REQUIRED.

CARTRIDGE SELECTION

CARTRIDGE DEPTH	54"	40"	27"	15"
OUTLET INVERT TO STRUCTURE INVERT (A)	6'-5"	5'-3"	4'-2"	3'-2"
FLOW RATE HIGH-FLO / DRAINDOWN (cfs) (per cart)	0.18 / 0.09	0.13 / 0.065	0.09 / 0.045	0.05 / 0.025
MAX. CARTS HIGH-FLO / DRAINDOWN	6 / 1			

FRAME AND COVER
(DIAMETER VARIES)
N.T.S.

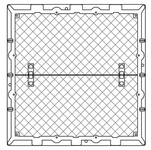

HATCH
(48" x 48" CAST INTO SLAB)
N.T.S.

SITE SPECIFIC DATA REQUIREMENTS

STRUCTURE ID			*
WATER QUALITY FLOW RATE (cfs)			*
PEAK FLOW RATE (cfs)			*
RETURN PERIOD OF PEAK FLOW (yrs)			*
# OF CARTRIDGES REQUIRED (HF / DD)			* / *
CARTRIDGE SIZE			*
PIPE DATA	I.E.	MATERIAL	DIAMETER
INLET PIPE #1	*	*	*
INLET PIPE #2	*	*	*
OUTLET PIPE	*	*	*
RIM ELEVATION			*
ANTI-FLOTATION BALLAST		WIDTH	HEIGHT
		*	*
NOTES/SPECIAL REQUIREMENTS:			
* PER ENGINEER OF RECORD			

GENERAL NOTES:
1. CONTECH TO PROVIDE ALL MATERIALS UNLESS NOTED OTHERWISE.
2. FOR SITE SPECIFIC DRAWINGS WITH DETAILED STRUCTURE DIMENSIONS AND WEIGHT, PLEASE CONTACT YOUR CONTECH ENGINEERED SOLUTIONS REPRESENTATIVE. www.ContechES.com
3. JELLYFISH WATER QUALITY STRUCTURE SHALL BE IN ACCORDANCE WITH ALL DESIGN DATA AND INFORMATION CONTAINED IN THIS DRAWING. CONTRACTOR TO CONFIRM STRUCTURE MEETS REQUIREMENTS OF PROJECT.
4. STRUCTURE SHALL MEET AASHTO HS-20 OR PER APPROVING JURISDICTION REQUIREMENTS, WHICHEVER IS MORE STRINGENT, ASSUMING EARTH COVER OF 0' - 3', AND GROUNDWATER ELEVATION AT, OR BELOW, THE OUTLET PIPE INVERT ELEVATION. ENGINEER OF RECORD TO CONFIRM ACTUAL GROUNDWATER ELEVATION. CASTINGS SHALL MEET AASHTO M306 LOAD RATING AND BE CAST WITH THE CONTECH LOGO.
5. STRUCTURE SHALL BE PRECAST CONCRETE CONFORMING TO ASTM C-478 AND AASHTO LOAD FACTOR DESIGN METHOD.
6. NO PRODUCT SUBSTITUTIONS SHALL BE ACCEPTED UNLESS SUBMITTED 10 DAYS PRIOR TO PROJECT BID DATE, OR AS DIRECTED BY THE ENGINEER OF RECORD.

INSTALLATION NOTES
A. ANY SUB-BASE, BACKFILL DEPTH, AND/OR ANTI-FLOTATION PROVISIONS ARE SITE-SPECIFIC DESIGN CONSIDERATIONS AND SHALL BE SPECIFIED BY ENGINEER OF RECORD.
B. CONTRACTOR TO PROVIDE EQUIPMENT WITH SUFFICIENT LIFTING AND REACH CAPACITY TO LIFT AND SET THE STRUCTURE (LIFTING CLUTCHES PROVIDED).
C. CONTRACTOR WILL INSTALL AND LEVEL THE STRUCTURE, SEALING THE JOINTS, LINE ENTRY AND EXIT POINTS (NON-SHRINK GROUT WITH APPROVED WATERSTOP OR FLEXIBLE BOOT)
D. CONTRACTOR TO TAKE APPROPRIATE MEASURES TO PROTECT CARTRIDGES FROM CONSTRUCTION-RELATED EROSION RUNOFF.
E. CARTRIDGE INSTALLATION, BY CONTECH, SHALL OCCUR ONLY AFTER SITE HAS BEEN STABILIZED AND THE JELLYFISH UNIT IS CLEAN AND FREE OF DEBRIS. CONTACT CONTECH TO COORDINATE CARTRIDGE INSTALLATION WITH SITE STABILIZATION AT (866) 740-3318.

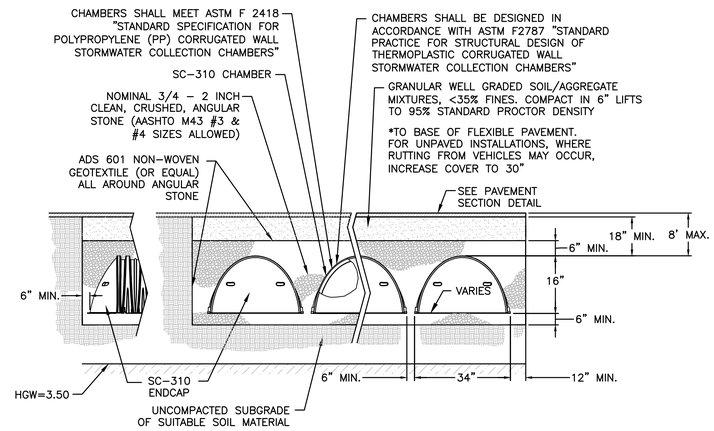

CROSS SECTION

NOTES:

1. SYSTEM 1 CONTAINS 56 CHAMBERS AND 8 END CAPS.
2. SYSTEM 2 CONTAINS 70 CHAMBERS AND 14 END CAPS.
3. SYSTEM 3 CONTAINS 64 CHAMBERS AND 16 END CAPS.
4. THE INSTALLED CHAMBER SYSTEM SHALL PROVIDE THE LOAD FACTORS SPECIFIED IN THE AASHTO LRFD BRIDGE DESIGN SPECIFICATIONS SECTION 12.12 FOR EARTH AND LIVE LOADS, WITH CONSIDERATION FOR IMPACT AND MULTIPLE VEHICLE PRESENCES.
5. PERIMETER STONE MUST ALWAYS BE BROUGHT UP EVENLY WITH BACKFILL OF BED. PERIMETER STONE MUST EXTEND HORIZONTALLY TO THE EXCAVATION WALL FOR BOTH STRAIGHT OR SLOPED SIDEWALLS.

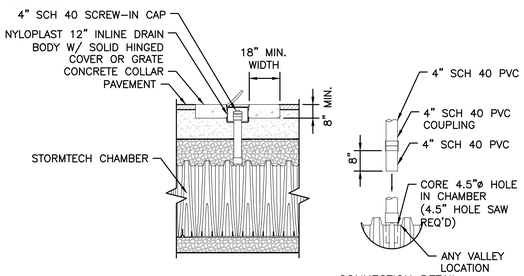

CONNECTION DETAIL

NOTES:
1. INSPECTION PORTS MAY BE CONNECTED THROUGH ANY CHAMBER CORRUGATION VALLEY
2. ALL SCHEDULE 40 FITTINGS TO BE SOLVENT CEMENTED.

INSPECTION PORT DETAIL

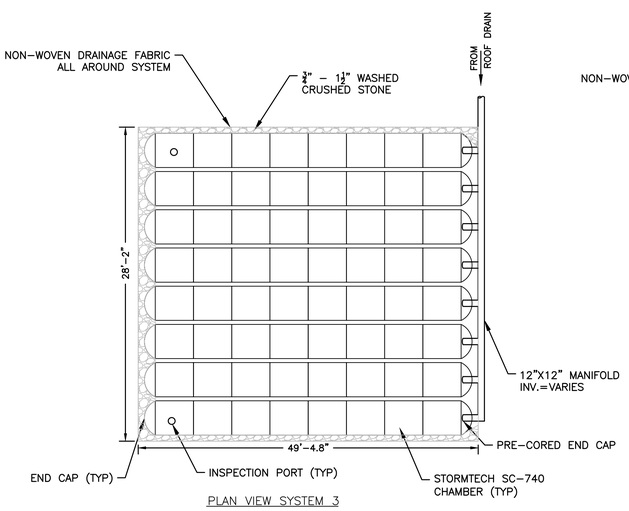

PLAN VIEW SYSTEM 3

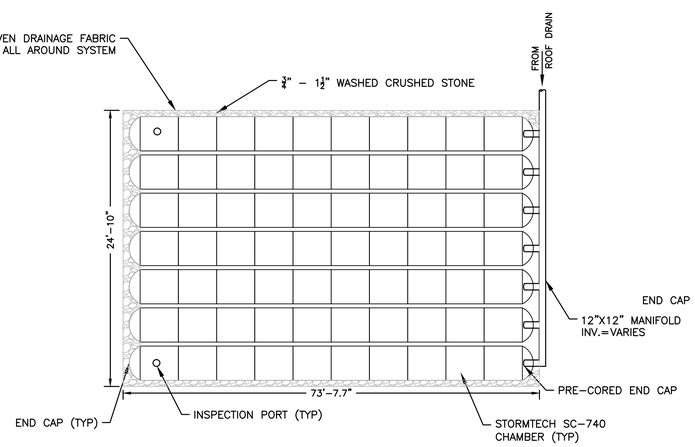

PLAN VIEW SYSTEM 2

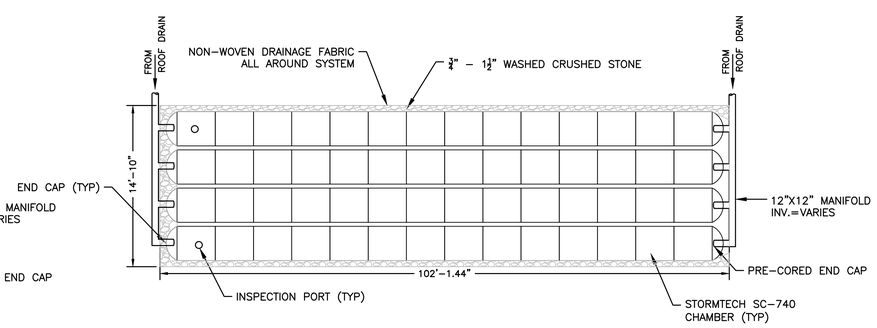

PLAN VIEW SYSTEM 1

INFILTRATION SYSTEM

NOT TO SCALE

HOWARD STEIN HUDSON
11 Beacon Street, Suite 1010
Boston, MA 02108
www.hshassoc.com

PREPARED FOR:

205 REVERE BEACH PARKWAY PARTNERS, LLC
C/O GATE RESIDENTIAL
265 FRANKLIN STREET, 6TH FLOOR
BOSTON, MA 02110
T: (617) 904-7000

205 REVERE BEACH PARKWAY
REVERE, MA 02151

REVISIONS:

NO	BY	DATE	DESCRIPTION

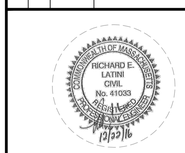

NOI PERMIT SET

SITE DETAILS

DATE:	12/22/16
PROJECT NUMBER:	15040
DESIGNED BY:	HV
DRAWN BY:	HV
CHECKED BY:	RL

C4.03

HOWARD STEIN HUDSON

Engineers + Planners

205 Revere Beach Parkway

Stormwater Report

Prepared for
205 Revere Beach Parkway Partners, LLC

Prepared by
Howard Stein Hudson

December 2016

COMMONWEALTH OF MASSACHUSETTS
RICHARD E. LATINI
CIVIL
No. 41033
REGISTERED PROFESSIONAL ENGINEER
12/21/16

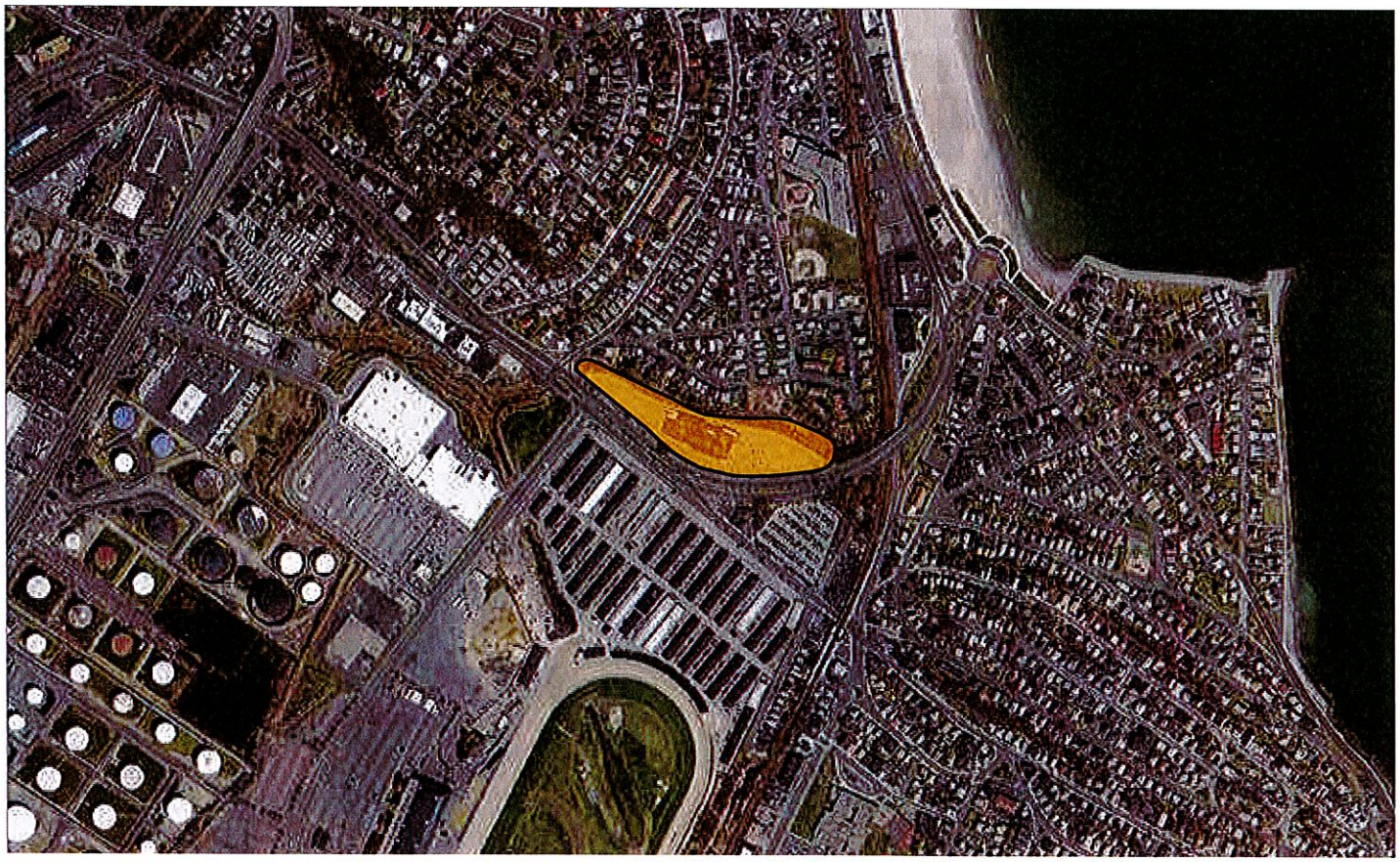

Table of Contents

Introduction **1**

Hydrology 1

Pre-construction Hydrology 1

Post-construction Hydrology 2

Stormwater Management Standards 3

Standard 1: No New Untreated Discharges 3

Standard 2: Post-Development Peak Discharge Rates Not to Exceed Pre-Development Peak Discharge Rates 3

Standard 3: Minimize or Eliminate Loss of Annual Recharge to Groundwater 4

Standard 4: Stormwater Management System to Remove 80% of Average Annual Load of Total Suspended Solids (TSS) 5

Standard 5: Land Uses with Higher Potential Pollutant Loads 5

Standard 6: Stormwater Discharges to Critical Areas 5

Standard 7: Redevelopment Projects 5

Standard 8: Control Construction-Related Impacts 6

Standard 9: Long-Term Operation and Maintenance Plan 6

Standard 10: No Illicit Discharges 6

Appendix A: Soil Information 7
Appendix B: Pre-Construction Hydrology 8
Appendix C: Post-Construction Hydrology 9
Appendix D: Recharge and Water Quality Cal's 10
Appendix E: Operation and Maintenance Plan 11
Appendix F: Checklist for Stormwater Report 12
Appendix G: Illicit Discharge Compliance Statement 13

List of Tables

Table 1. Pre- Vs Post-Development Peak Discharge Rates 4

Introduction

This Stormwater Management Report describes the existing drainage conditions and proposed stormwater best management practices (BMPs) designed to treat and control runoff at 205 Revere Beach Parkway (the "Site")

The existing Site encompasses approximately 6.2± acres of land. It contains a vacant 45,000± square foot (sf) building and 166,000± sf paved parking lot. Currently, a majority of the Site's stormwater runoff flows overland to Sales Creek. There are two catch basins in the front of the building that along with the rooftop runoff appear to discharge through one of two 12-inch outlet pipes located in the slope adjacent to the creek. Portions of the site along Revere Beach Parkway and a portion of the parking lot at its southwesterly end drain into the existing stormwater drainage system owned by the Department of Conservation and Recreation (DCR) in Revere Beach Parkway. Existing runoff generally receives no water quality treatment and there is little opportunity for stormwater infiltration.

The Project will result in a decrease in impervious area of approximately 31,577 ft². Stormwater BMPs will be constructed to improve the water quality of runoff from some new and existing paved areas as well as the roofs of the proposed buildings. Stormwater BMPs include deep sump catch basins, subsurface infiltration systems, and stormwater treatment (water quality) units. These systems will capture and help reduce pollutant concentrations in the stormwater runoff prior to discharging to Sales Creek and nearby wetlands.

Pre and post-construction hydrology was analyzed with HydroCAD v 10.0, model using TR-20 methodology. The rainfall data was obtained from Technical Paper No. 40 (TP 40) Rainfall Frequency Atlas of the United States for 24 hour storms. The result of this analysis shows there will be a decrease in the peak discharge rates & volumes from the site in the post-development conditions for all the storm events analyzed (Refer to Table 1 for pre- and post-development peak discharge rate comparisons). The Project is a redevelopment project and is designed to the maximum extent practicable to be in compliance with the Massachusetts Department of Environmental Protection's Stormwater Management Policy for Redevelopment.

Hydrology

PRE-CONSTRUCTION HYDROLOGY

The hydrology calculations analyze two design points: (DP#1) flow to Sales Creek; and (DP#2) flow to Revere Beach Parkway. The existing project site was divided into 2 Subcatchment areas. These

Subcatchment areas are shown on the plans entitled "Pre-Development Drainage Areas" provided in Appendix B.

A majority of the surface runoff from Subcatchment E1 flows overland in a northeasterly direction and into Sales Creek (DP#1). The rooftop runoff appears to discharge to the Creek through two 12-inch outlet pipes located in the slope adjacent to the Creek. There are also two catch basins to the south of the existing building that collect stormwater runoff and appear to discharge to the Creek through the easterly 12-inch outlet pipe.

Subcatchment E2 collects stormwater from a southwesterly portion of the parking lot which flows directly to Revere Beach Parkway (DP#2). The stormwater is then collected in catch basins that connect to an 18" closed pipe drainage system that runs from southeast to the northwest along Revere Beach Parkway.

POST-CONSTRUCTION HYDROLOGY

The proposed development will improve the stormwater management system by introducing elements to improve the water quality of the runoff and providing recharge opportunities. Structural Best Management practices (BMPs) proposed include: deep sump catch basins, stormwater treatment units, and subsurface infiltration systems. The proposed drainage design is shown on the plans entitled "Grading & Utilities Plans" provided in Appendix H. The proposed project site was divided into eight subcatchment areas. These subcatchment areas are shown on the plans entitled "Post-Development Drainage Areas" provided in Appendix C.

Flow to Sales Creek (DP#1)

In the proposed condition, stormwater runoff generated throughout most of the site (P1A , P2, P3A, and P3B) will be collected in new deep sump catch basins and sent to water quality units for treatment before ultimately discharging towards Sales Creek via two existing 12" outfalls. The area to the north behind the proposed curbing and retaining wall (P1B) flows overland into Sales Creek. Three subsurface infiltration systems are proposed in this area which will infiltrate the stormwater runoff from the roofs of the two proposed buildings.

Revere Beach Parkway (DP#2)

Runoff from a strip of land along the southerly portion of the site (P4) will flow overland into Revere Beach Parkway (DP#2) where it will be collected in existing catch basins within the roadway.

Stormwater Management Standards

STANDARD 1: NO UNTREATED DISCHARGES OR EROSION TO WETLANDS

The project will not discharge untreated stormwater to wetlands and will improve the existing outfalls to mitigate potential erosion.

Water quality BMPs include deep sump catch basins, stormwater treatment units, and subsurface infiltration structures.

Existing outfalls will be improved to include level spreaders or other erosion control to minimize discharge velocities to prevent erosion or scouring.

STANDARD 2: POST-DEVELOPMENT PEAK DISCHARGE RATES NOT TO EXCEED PRE-DEVELOPMENT PEAK DISCHARGE RATES

The post-development peak discharge rate is less than the existing peak discharge rate due to the decrease in impervious area and the construction of three subsurface infiltration systems. There is a slight 0.17 cfs increase in the peak discharge rate towards Revere Beach Parkway during the 100-yr storm, but an overall decrease of 1.7 cfs in the total runoff from the site. All runoff from the site ultimately ends up in the 5-foot diameter culvert that crosses under Revere Beach Parkway towards Tomesello Way.

Table 1. Pre- Vs Post-Development Peak Discharge Rates

Design Point	Pre-Development Rate (cfs)	Pre-Development Volume (af)	Post-Development Rates (cfs)	Post-Development Volume(af)
2-Year Storm Event				
DP #1: Flow to Sales Creek and Wetland Area	17.82	1.29	16.19	1.00
DP #2: Flow to Revere Beach Parkway	0.95	0.07	0.82	0.06
Sub-total	**18.77**	**1.36**	**17.01**	**1.06**
10-Year Storm Event				
DP #1: Flow to Sales Creek and Wetland Area	26.46	1.96	24.67	1.63
DP #2: Flow to Revere Beach Parkway	1.39	0.10	1.37	0.10
Sub-total	**27.86**	**2.06**	**26.04**	**1.73**
100-Year Storm Event				
DP #1: Flow to Sales Creek and Wetland Area	41.09	3.13	39.22	2.78
DP #2: Flow to Revere Beach Parkway	2.15	0.16	2.32	0.16
Sub-total	**43.24**	**3.29**	**41.54**	**2.94**

STANDARD 3: MINIMIZE OR ELIMINATE LOSS OF ANNUAL RECHARGE TO GROUNDWATER

The stormwater management system will increase the annual recharge to the groundwater over existing conditions.

The Soil Map available from the Natural Resources Conservation Service indicates that the soils on-site include Ipswich mucky peat (0% to 2% slopes), Urban land, wet substratum (0% to 3% slopes) and Udorthents, wet substratum. Hydrologic Soil Group (HSG) C classification was used as a basis for the calculations. The recharge depth prescribed in the Standards for this HSG is 0.25 inches. The proposed infiltration systems are designed to provide more than this prescribed recharge. Recharge volume calculations are provided in Appendix D.

STANDARD 4: STORMWATER MANAGEMENT SYSTEM TO REMOVE 80% OF AVERAGE ANNUAL LOAD OF TOTAL SUSPENDED SOLIDS (TSS)

The stormwater management system is designed to remove 80% of the average annual total suspended solids (TSS) from the project site. This is accomplished by the installation of deep sump catch basins, stormwater treatment units and subsurface infiltration systems. TSS removal calculations are provided in Appendix D.

STANDARD 5: LAND USES WITH HIGHER POTENTIAL POLLUTANT LOADS

The development includes a high-intensity-use (greater than 1,000 vehicle trips per day) parking lot. Runoff from the parking areas is treated through deep sump catch basins and stormwater treatment units that provide filtration. The water quality volume being treated is equal to one inch times the impervious area. A Long-Term Pollution Prevention Plan is included with the Operations and Maintenance Plan provided in Appendix E.

STANDARD 6: STORMWATER DISCHARGES TO CRITICAL AREAS

Sales Creek is identified as an Area of Critical Environmental Concern (ACEC) and an Outstanding Resource Water (ORW) as it is connected hydraulically to the Rumney Marshes system. The stormwater management system is designed to meet this standard to the extent practicable by incorporating stormwater treatment units sized for a volume equal to one inch times the impervious area. A source control and pollution prevention plan will be followed and include management of snow and deicing chemicals

STANDARD 7: REDEVELOPMENT PROJECTS

The Project is considered a redevelopment project as it lies within a previously developed site. Redevelopment projects are required to meet Standard 2 and 3 to the maximum extent practicable, and the pretreatment and structural stormwater BMP requirements of Standards, 4, 5 and 6. Existing stormwater discharges shall comply with Standard 1 only to the maximum extent practicable.

The Project is expected to fully comply with Standards 2 and 3. The Project proposed to meet Standards 4, 5 and 6 to the extent practicable through the use of deep sump catch basins, stormwater treatment units, and infiltration of rooftop runoff. The Project does not propose new outfalls locations but will provide improvements to the existing outfalls, which may include level spreaders or rip rap to protect against erosion and scouring.

The Project will improve existing conditions by attenuating peak runoff rates, promoting infiltration, and treating stormwater before it leaves the site or enters Sales Creek. The Project increases open space by over 63,000± sf and decreases impervious areas by over 31,500± sf

STANDARD 8: CONTROL CONSTRUCTION-RELATED IMPACTS

The project will install erosion and sediment controls prior to any major earthwork activity. Land disturbance will be kept to a minimum. Stabilization, such as temporary vegetation or mulch, will be provided on disturbed areas if final grading is to be delayed for more than 21 days. The Contractor will be responsible for controlling erosion and dust throughout construction.

The Project will disturb more than an acre of land. A Notice of Intent will be submitted to the U.S. Environmental Protection Agency for coverage under the General Permit for Construction Activity. A Stormwater Pollution Prevention Plan (SWPPP) will be prepared and implemented by the Proponent.

STANDARD 9: LONG-TERM OPERATION AND MAINTENANCE PLAN

See Appendix E for the operation and maintenance requirements of the stormwater management system.

STANDARD 10: NO ILLICIT DISCHARGES

There are no known or proposed illicit connections associated with this project. An illicit discharge compliance statement is provided in Appendix G.

Appendix A:
Soil Information

Hydrologic Soil Group—Norfolk and Suffolk Counties, Massachusetts
(205 Revere Beach Parkway Soils Map)

Map Scale: 1:2,340 if printed on A landscape (11" x 8.5") sheet.

N

Meters: 0 30 60 120 180

Feet: 0 100 200 400 600

Map projection: Web Mercator Corner coordinates: WGS84 Edge tics: UTM Zone 19N WGS84

MAP LEGEND

Area of Interest (AOI)

- Area of Interest (AOI)

Soils

Soil Rating Polygons

- A
- A/D
- B
- B/D
- C
- C/D
- D
- Not rated or not available

Soil Rating Lines

- A
- A/D
- B
- B/D
- C
- C/D
- D
- Not rated or not available

Soil Rating Points

- A
- A/D
- B
- B/D
- C
- C/D
- D
- Not rated or not available

Water Features

- Streams and Canals

Transportation

- Rails
- Interstate Highways
- US Routes
- Major Roads
- Local Roads

Background

- Aerial Photography

MAP INFORMATION

The soil surveys that comprise your AOI were mapped at 1:25,000.

Warning: Soil Map may not be valid at this scale.

Enlargement of maps beyond the scale of mapping can cause misunderstanding of the detail of mapping and accuracy of soil line placement. The maps do not show the small areas of contrasting soils that could have been shown at a more detailed scale.

Please rely on the bar scale on each map sheet for map measurements.

Source of Map: Natural Resources Conservation Service
Web Soil Survey URL: http://websoilsurvey.nrcs.usda.gov
Coordinate System: Web Mercator (EPSG:3857)

Maps from the Web Soil Survey are based on the Web Mercator projection, which preserves direction and shape but distorts distance and area. A projection that preserves area, such as the Albers equal-area conic projection, should be used if more accurate calculations of distance or area are required.

This product is generated from the USDA-NRCS certified data as of the version date(s) listed below.

Soil Survey Area: Norfolk and Suffolk Counties, Massachusetts
Survey Area Data: Version 10, Sep 19, 2014

Soil map units are labeled (as space allows) for map scales 1:50,000 or larger.

Date(s) aerial images were photographed: Aug 10, 2014—Aug 25, 2014

The orthophoto or other base map on which the soil lines were compiled and digitized probably differs from the background imagery displayed on these maps. As a result, some minor shifting of map unit boundaries may be evident.

Hydrologic Soil Group

Hydrologic Soil Group— Summary by Map Unit — Norfolk and Suffolk Counties, Massachusetts (MA616)				
Map unit symbol	**Map unit name**	**Rating**	**Acres in AOI**	**Percent of AOI**
65	Ipswich mucky peat, 0 to 2 percent slopes, very frequently flooded	A/D	1.2	9.0%
603	Urban land, wet substratum, 0 to 3 percent slopes		11.3	85.1%
655	Udorthents, wet substratum		0.8	5.9%
Totals for Area of Interest			**13.3**	**100.0%**

Description

Hydrologic soil groups are based on estimates of runoff potential. Soils are assigned to one of four groups according to the rate of water infiltration when the soils are not protected by vegetation, are thoroughly wet, and receive precipitation from long-duration storms.

The soils in the United States are assigned to four groups (A, B, C, and D) and three dual classes (A/D, B/D, and C/D). The groups are defined as follows:

Group A. Soils having a high infiltration rate (low runoff potential) when thoroughly wet. These consist mainly of deep, well drained to excessively drained sands or gravelly sands. These soils have a high rate of water transmission.

Group B. Soils having a moderate infiltration rate when thoroughly wet. These consist chiefly of moderately deep or deep, moderately well drained or well drained soils that have moderately fine texture to moderately coarse texture. These soils have a moderate rate of water transmission.

Group C. Soils having a slow infiltration rate when thoroughly wet. These consist chiefly of soils having a layer that impedes the downward movement of water or soils of moderately fine texture or fine texture. These soils have a slow rate of water transmission.

Group D. Soils having a very slow infiltration rate (high runoff potential) when thoroughly wet. These consist chiefly of clays that have a high shrink-swell potential, soils that have a high water table, soils that have a claypan or clay layer at or near the surface, and soils that are shallow over nearly impervious material. These soils have a very slow rate of water transmission.

If a soil is assigned to a dual hydrologic group (A/D, B/D, or C/D), the first letter is for drained areas and the second is for undrained areas. Only the soils that in their natural condition are in group D are assigned to dual classes.

Rating Options

Aggregation Method: Dominant Condition

Component Percent Cutoff: *None Specified*

Tie-break Rule: Higher

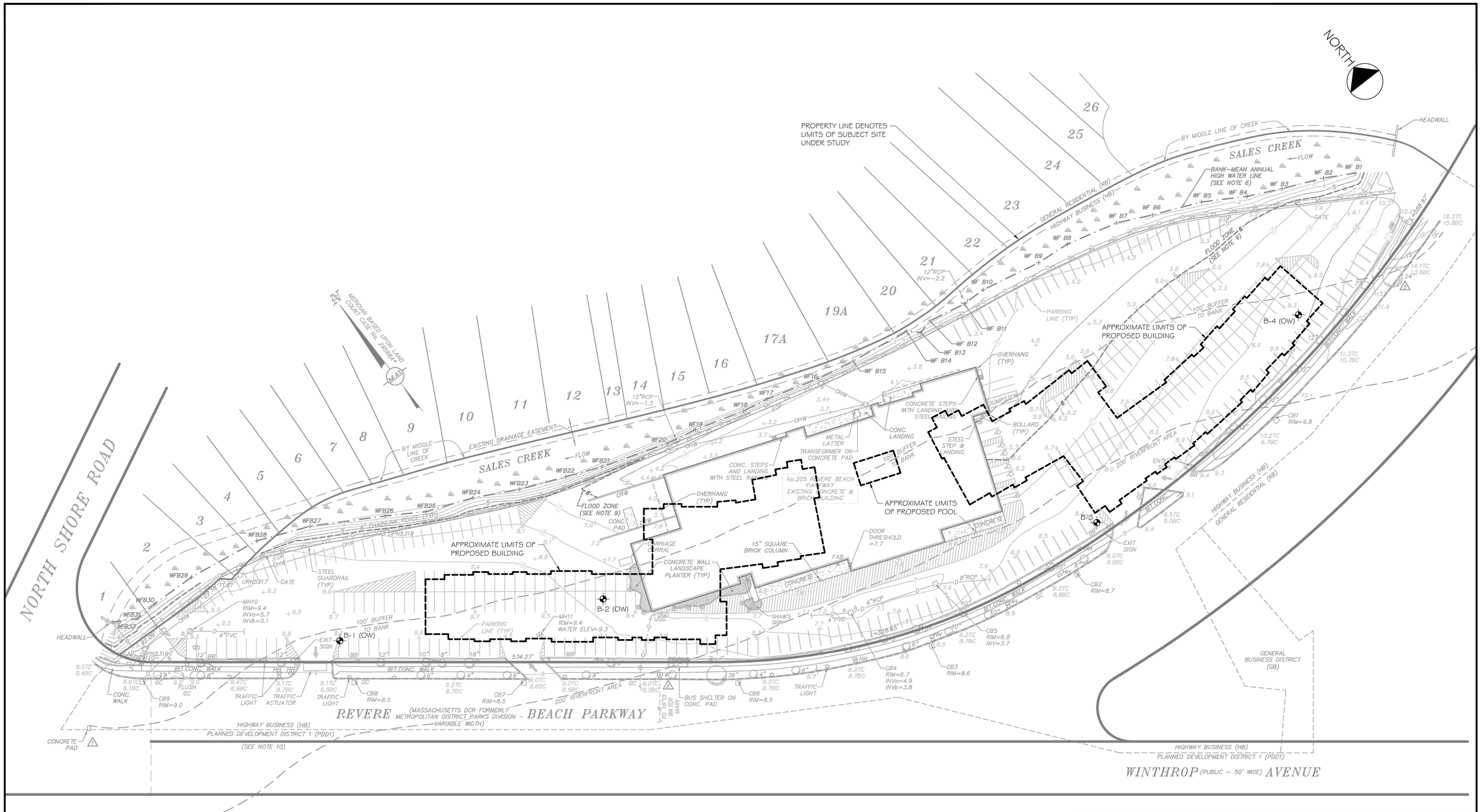

LEGEND

⊕ — APPROXIMATE LOCATION OF BORING PERFORMED BY CARR-DEE CORP. DURING MAY 11 THROUGH 15, 2015 FOR McPHAIL ASSOCIATES, LLC.

(OW) — INDICATES OBSERVATION WELL INSTALLED WITHIN COMPLETED BOREHOLE.

REFERENCE: THIS PLAN WAS PREPARED FROM A 40-SCALE DRAWING ENTITLED "RECORD CONDITIONS PLAN OF LAND" DATED SEPTEMBER 27, 2012 BY MERIDIAN ASSOCIATES.

GRAPHIC SCALE

40 0 40 80 160

McPHAIL ASSOCIATES, LLC
Geotechnical and Geoenvironmental Engineers
2269 Massachusetts Avenue
Cambridge, MA 02140
617/868-1420
617/868-1423 (Fax)
www.mcphailgeo.com

205 REVERE BEACH PARKWAY

REVERE — MASSACHUSETTS

SUBSURFACE EXPLORATION PLAN

FOR

GATE RESIDENTIAL PROPERTIES, LLC

BY

McPHAIL ASSOCIATES, LLC

Date: JUNE 2015	Dwn: F.G.P.	Chkd: H.J.B.	Scale: 1" = 40'
Project No: 5938			FIGURE 2

FILE NAME: H:\Acad\DBS\5938\5938-F02.dwg

FILE NAME: H:\Acad\JOBS\5938\5938-F03_Sieve.dwg

PROJECT No. 5938

M.I.T. GRAIN SIZE SCALE

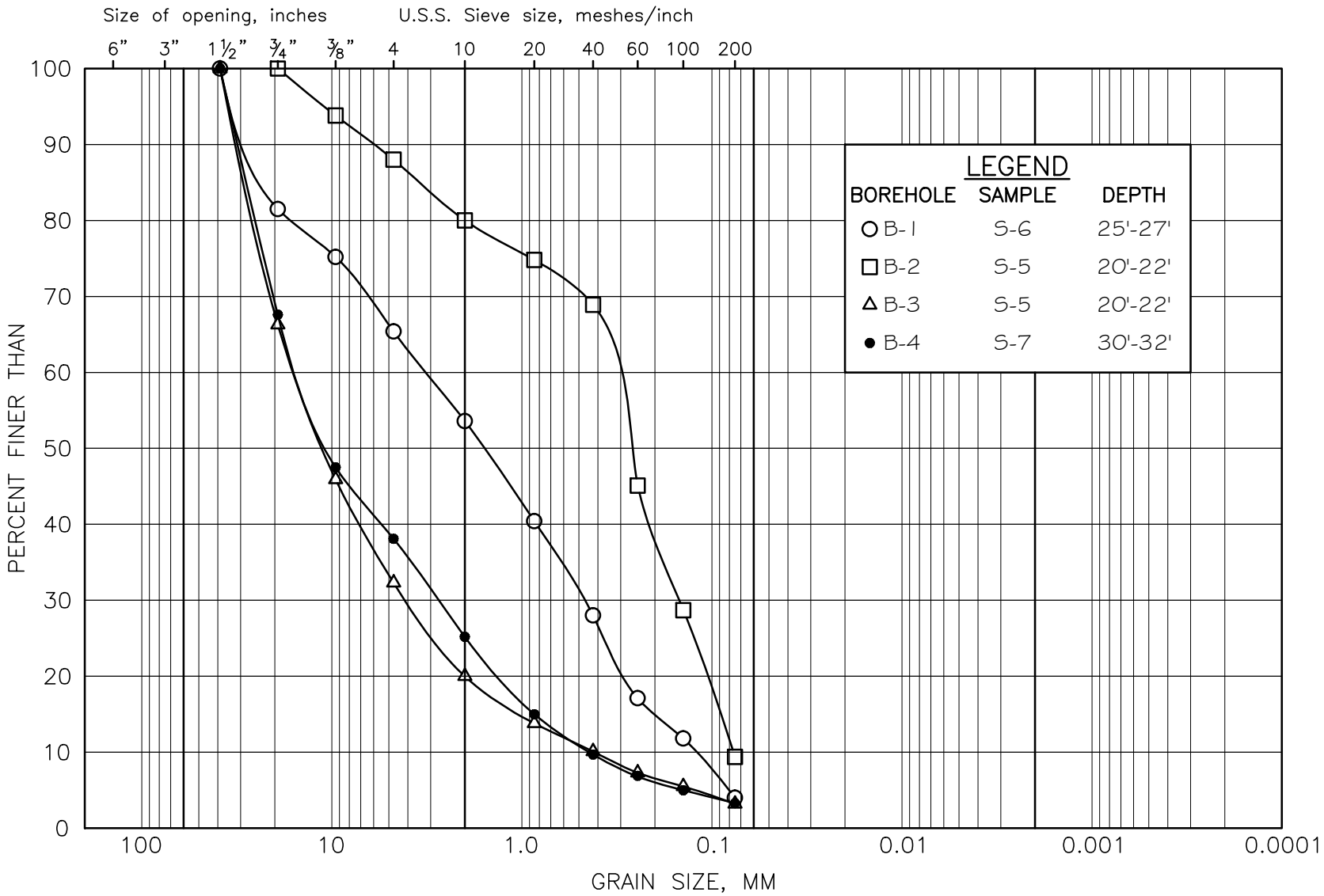

COBBLE SIZE	COARSE	MEDIUM	FINE	COARSE	MEDIUM	FINE	SILT SIZE	CLAY SIZE
	GRAVEL SIZE			SAND SIZE			FINE GRAINED	

McPHAIL ASSOCIATES, LLC

GRAIN SIZE DISTRIBUTION
MARINE SAND AND GRAVEL

FIGURE 3

CARR-DEE CORP.

37 LINDEN STREET MEDFORD, MA 02155-0001 Telephone (781) 391-4500

To: MCPHAIL ASSOC., LLC, 2269 MASS. AVE., CAMBRIDGE, MA Date: 5-26-2015 Job No.: 2015-70

Location: 205 REVERE BEACH PKWY., REVERE, MA Scale: 1 in.= 9 ft.

BORING 1

GROUND SURFACE +9.6

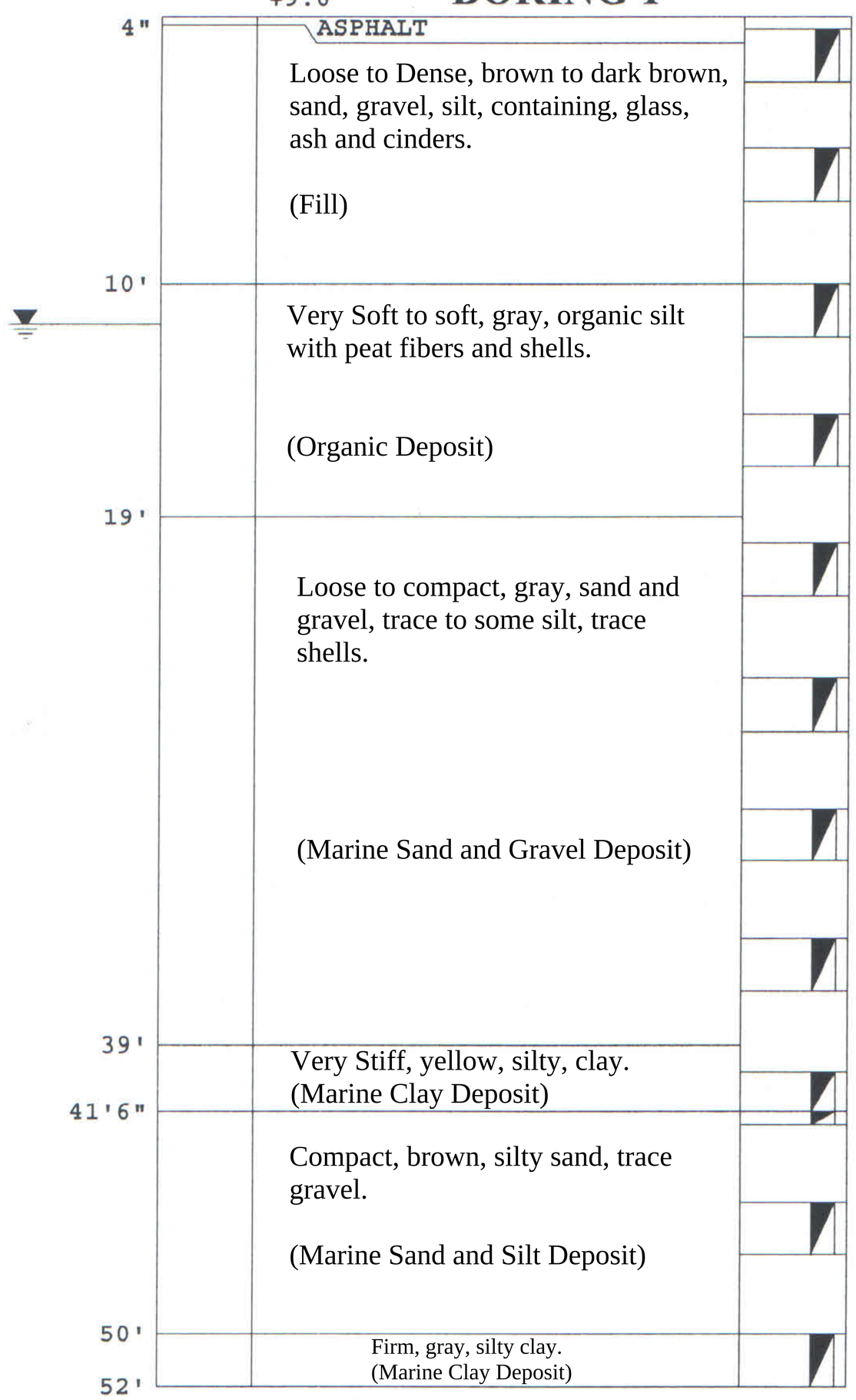

S#1, 6" to 2'6" (10-18-17-12) RECOVERED 14 in.

S#2, 5' to 7' (8-4-5-3) RECOVERED 7 in.

S#3, 10' to 12' (2-1-1-1) RECOVERED 20 in.

S#4, 15' to 17' RECOVERED 21 in.

S#5, 20' to 22' (8-3-3-2) RECOVERED 12 in.

S#6, 25' to 27' (10-11-11-13) RECOVERED 16 in.

S#7, 30' to 32' (7-8-9-7) RECOVERED 20 in.

S#8, 35' to 37' (5-3-4-5) RECOVERED 17 in.

S#9, 40' to 41'6" (7-8-8) RECOVERED 15 in.

S#9A, 41'6" to 42' (18) RECOVERED 6 in.

S#10, 45' to 47' (8-8-13-11) RECOVERED 16 in.

S#11, 50' to 52' (3-2-2-3) RECOVERED 24 in.

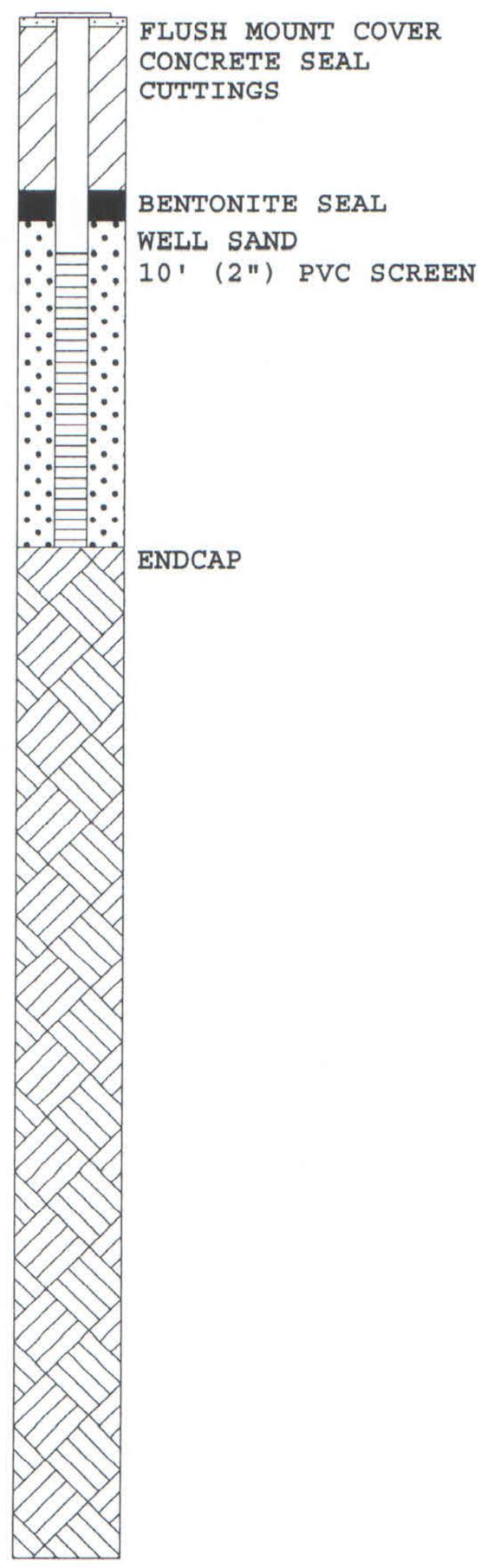

WATER LEVEL 11'6"
SIZE OF CASING: NW, LENGTH: 40'0"
DRILLER: G. SMITH, INSPECTOR: J. KEEFE
DATE STARTED & COMPLETED: 5-21-2015

All samples have been visually classified by DRILLER. Unless otherwise specified, water levels noted were observed at completion of borings, and do not necessarily represent permanent ground water levels. Figures in parenthesis indicate the number of blows required to drive Two-inch Split Sampler 6 inches using 140 lb. weight falling 30 inches(±). Figures in column to left (if noted) indicate number of blows to drive casing one foot, using 300 lb. weight falling 24 inches (±).

CARR-DEE CORP.

37 LINDEN STREET MEDFORD, MA 02155-0001 Telephone (781) 391-4500

To: MCPHAIL ASSOC., LLC, 2269 MASS. AVE., CAMBRIDGE, MA Date: 5-26-2015 Job No.: 2015-70

Location: 205 REVERE BEACH PKWY., REVERE, MA Scale: 1 in.= 9 ft.

GROUND SURFACE +9.1

BORING 2

4" ASPHALT

Loose to Dense, brown to dark brown, sand, gravel, silt, containing, glass, ash and cinders.

(Fill)

12'

Very soft to soft, organic silt.

(Organic Deposit)

19'

Loose to compact, sand and gravel. trace to some silt, trace shells.

(Marine Sand and Gravel Deposit)

50'

51'6"

Compact, gray, clay and silt, trace to some sand and shells. (Marine Clay and Silt Deposit)

Stiff to hard, yellow clay, some fine sand, trace gravel.

(Marine Clay Deposit)

58'

Very Dense, brown, silt, sand and gravel. (Glacial Till Deposit)

60'7"

S#1, 6" to 2'6" (23-17-11-9) RECOVERED 8 in.

S#2, 5' to 7' (18-11-13-11) RECOVERED 14 in.

S#3, 10' to 12' (3-1-1-1) RECOVERED 6 in.

S#4, 15' to 17' (1-1-1-1) RECOVERED 18 in.

S#5, 20' to 22' (10-7-7-8) RECOVERED 18 in.

S#6, 25' to 27' (6-5-3-2) RECOVERED 10 in.

S#7, 30' to 32' (11-9-8-9) RECOVERED 15 in.

S#8, 35' to 37' (5-5-7-7) RECOVERED 10 in.

S#9, 40' to 42' (10-9-9-12) RECOVERED 6 in.

S#10, 45' to 47' (11-10-9-7) RECOVERED 15 in.

S#11, 50' to 51'6" (4-4-9) RECOVERED 8 in.

S#11A, 51'6" to 52' (8) RECOVERED 3 in.

S#12, 55' to 57' (17-15-17-33) RECOVERED 11 in.

S#13, 60' to 60'7" (94-120/1") RECOVERED 6 in.

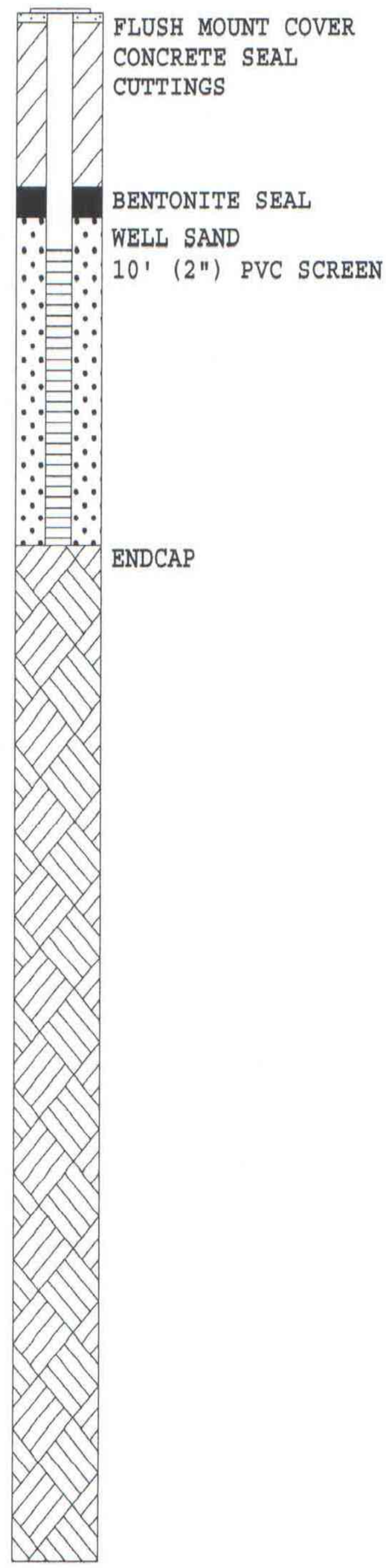

WATER LEVEL 12'
SIZE OF CASING: NW, LENGTH: 50'0"
DRILLER: G. SMITH, INSPECTOR: J. KEEFE
DATE STARTED & COMPLETED: 5-20-21-2015

All samples have been visually classified by DRILLER. Unless otherwise specified, water levels noted were observed at completion of borings, and do not necessarily represent permanent ground water levels. Figures in parenthesis indicate the number of blows required to drive Two-inch Split Sampler 6 inches using 140 lb. weight falling 30 inches(±). Figures in column to left (if noted) indicate number of blows to drive casing one foot, using 300 lb. weight falling 24 inches (±).

CARR-DEE CORP.

37 LINDEN STREET MEDFORD, MA 02155-0001 Telephone (781) 391-4500

To: MCPHAIL ASSOC., LLC, 2269 MASS. AVE., CAMBRIDGE, MA Date: 5-26-2015 Job No.: 2015-70

Location: 205 REVERE BEACH PKWY., REVERE, MA Scale: 1 in.= 7 ft.

GROUND SURFACE +8.4

BORING 3

3" ASPHALT

Loose to compact, brown to dark brown, sand, gravel, silt, containing, glass, ash and cinders.

(Fill)

S#1, 6" to 2'6" (9-7-13-8) RECOVERED 12 in.

S#2, 5' to 7' (2-2-4-4) RECOVERED 11 in.

8'

Very Soft to soft, gray, organic silt with peat fibers and shells.

(Organic Deposit)

S#3, 10' to 12' (3-1-1-1) RECOVERED 24 in.

S#4, 15' to 17' (1-2-3-3) RECOVERED 8 in.

18'

Compact, gray, sandy gravel, trace silt.

(Marine Sand and Gravel Deposit)

S#5, 20' to 22' (7-5-7-7) RECOVERED 6 in.

25'

Dense, gray, gravel, some sand trace silt.

(Marine Sand and Gravel Deposit)

S#6, 25' to 27' (31-25-22-14) RECOVERED 4 in.

S#7, 30' to 32' (25-20-16-16) RECOVERED 7 in.

34'

Loose to compact, gray, gravel, some sand, trace silt.

(Marine Sand and Gravel Deposit)

S#8, 35' to 37' (4-2-1-1) RECOVERED 7 in.

S#9, 40' to 42' (10-6-7-10) RECOVERED 5 in.

43'

Loose, gray, clay and silt, trace gravel and shells.

(Marine Clay and Silt Deposit)

S#10, 45' to 47' (5-3-3-3) RECOVERED 24 in.

S#11, 50' to 52' (9-4-4-3) RECOVERED 15 in.

S#12, 55' to 57' (10-5-2-4)

All samples have been visually classified by DRILLER. Unless otherwise specified, water levels noted were observed at completion of borings, and do not necessarily represent permanent ground water levels. Figures in parenthesis indicate the number of blows required to drive Two-inch Split Sampler 6 inches using 140 lb. weight falling 30 inches(±). Figures in column to left (if noted) indicate number of blows to drive casing one foot, using 300 lb. weight falling 24 inches (±).

CARR-DEE CORP.

37 LINDEN STREET MEDFORD, MA 02155-0001 Telephone (781) 391-4500

To: MCPHAIL ASSOC., LLC, 2269 MASS. AVE., CAMBRIDGE, MA Date: 5-26-2015 Job No.: 2015-70

Location: 205 REVERE BEACH PKWY., REVERE, MA Scale: 1 in.= 7 ft.

BORING 3

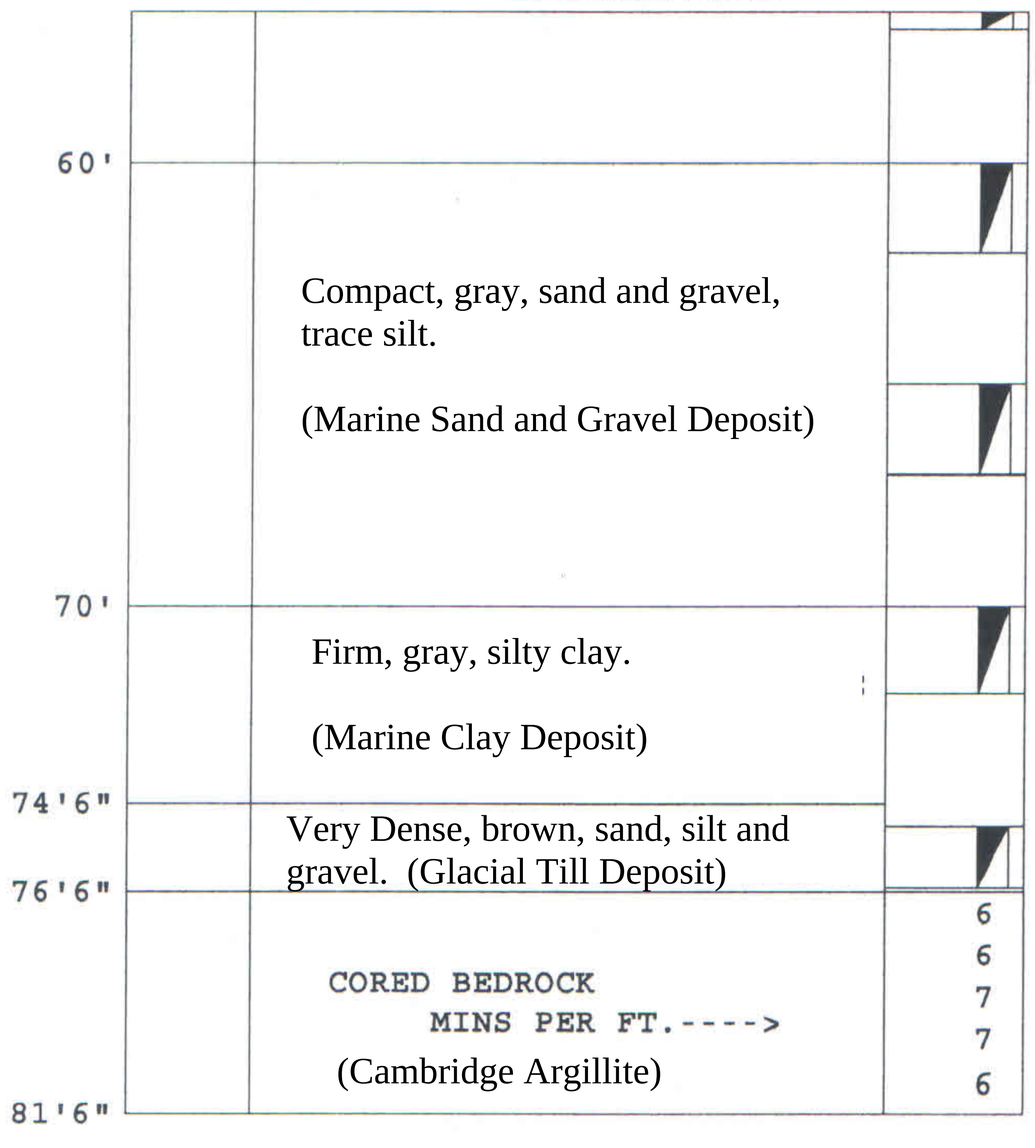

RECOVERED 14 in.

S#13, 60' to 62'
(19-11-6-6)
RECOVERED 14 in.

S#14, 65' to 67'
(19-15-12-12)
RECOVERED 15 in.

S#15, 70' to 72'
(4-3-1-10)
RECOVERED 20 in.

S#16, 75' to 76'5"
(50-61-120/5")
RECOVERED 17 in.

C-1, 76'6" to 81'6"
(75%)
RECOVERED 48 in.

WATER LEVEL 10'6"
SIZE OF CASING: NW, LENGTH: 75'0"
SIZE OF ROCK CORE: NX, LENGTH: 60"
DRILLER: G. SMITH, INSPECTOR: J. KEEFE
DATE STARTED & COMPLETED: 5-18-19-2015

Rock Core: Very Hard, fresh to slightly weathered, extremely to moderately fractured (top 8 inches sound), light gray, amorphous Cambridge Argillite; very close to close, open, shallow, dipping, rough joints; very thin to thin shallow bedding.

All samples have been visually classified by DRILLER. Unless otherwise specified, water levels noted were observed at completion of borings, and do not necessarily represent permanent ground water levels. Figures in parenthesis indicate the number of blows required to drive Two-inch Split Sampler 6 inches using 140 lb. weight falling 30 inches(±). Figures in column to left (if noted) indicate number of blows to drive casing one foot, using 300 lb. weight falling 24 inches (±).

CARR-DEE CORP.

37 LINDEN STREET MEDFORD, MA 02155-0001 Telephone (781) 391-4500

To: MCPHAIL ASSOC., LLC, 2269 MASS. AVE., CAMBRIDGE, MA Date: 5-26-2015 Job No.: 2015-70

Location: 205 REVERE BEACH PKWY., REVERE, MA Scale: 1 in.= 9 ft.

BORING 4

GROUND SURFACE +9.4

4" ASPHALT

Loose to compact, brown to dark brown, sand, gravel, silt, containing, glass, brick ash and cinders.

(Fill)

13'

Very soft, gray, organic silt, with shells.
(Organic Deposit)

18'6"

Soft to firm, organic silt, trace sand

(Organic Deposit)

25'

Loose , gray to brown, sand and gravel, trace to some silt. (Marine Sand and Gravel)

27'

Dense, gray to brown, sand and gravel, trace to some silt and shells.

(Marine Sand and Gravel)

63'

S#1, 6" to 2'6" (6-4-5-3) RECOVERED 18 in.

S#2, 5' to 7' (8-8-5-7) RECOVERED 20 in.

S#3, 10' to 12' (5-2-2-2) RECOVERED 4 in.

S#4, 15' to 17' (1/12"-1/12") RECOVERED 24 in.

S#5, 20' to 22' (7-2-2-3) RECOVERED 16 in.

S#6, 25' to 27' (3-3-6-5) RECOVERED 21 in.

S#7, 30' to 32' (27-16-9-12) RECOVERED 16 in.

S#8, 35' to 37' (21-21-20-21) RECOVERED 17 in.

S#9, 40' to 42' (30-15-17-11) RECOVERED 6 in.

S#10, 45' to 47' (67-14-32-23) RECOVERED 10 in.

S#11, 50' to 52' (16-16-17-12) RECOVERED 11 in.

S#12, 55' to 57' (72-21-14-14) RECOVERED 12 in.

S#13, 60' to 62' (14-13-26-26) RECOVERED 20 in.

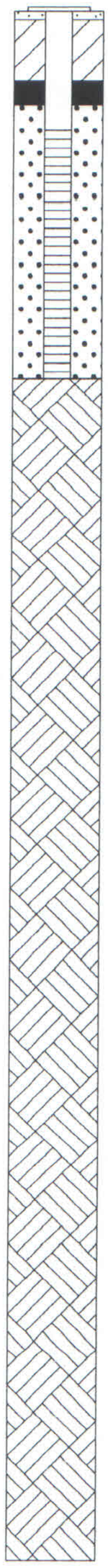

WATER LEVEL 10'6"
SIZE OF CASING: NW, LENGTH: 60'0"
DRILLER: G. SMITH, INSPECTOR: J. KEEFE
DATE STARTED & COMPLETED: 5-22-2015

All samples have been visually classified by DRILLER. Unless otherwise specified, water levels noted were observed at completion of borings, and do not necessarily represent permanent ground water levels. Figures in parenthesis indicate the number of blows required to drive Two-inch Split Sampler 6 inches using 140 lb. weight falling 30 inches(±). Figures in column to left (if noted) indicate number of blows to drive casing one foot, using 300 lb. weight falling 24 inches (±).

GROUNDWATER MONITORING REPORT

OW Number: B-1(OW)	Elevation Subtrahend : +9.6	Job No: 5938.9.00 Job Name: 205 Revere Beach Parkway

Date	Time	Elapsed Time	Depth of Water from Riser Top	Elevation of Water	Remarks	Read By
5/21/2015	3pm		11.5	-1.9		JK
5/22/2015	3pm	24 hrs	10.6	-1		JK
5/26/2015	10am	5 days	10.6	-1	Bailed Well	BC
5/27/2015	11am	6 days	10.8	-1.2		CH
5/28/2015	7:30am	7 days	10.8	-1.2	Groundwater Sampled	CH

McPHAIL ASSOCIATES, LLC

GROUNDWATER MONITORING REPORT

OW Number: B-2(OW)	Elevation Subtrahend :+9.1	Job No: 5938.9.00 Job Name: 205 Revere Beach Parkway

Date	Time	Elapsed Time	Depth of Water from Riser Top	Elevation of Water	Remarks	Read By
5/20/2015	3pm		8.6	0.5		JK
5/22/2015	3pm	24 hrs	12.0	-2.9		JK
5/26/2015	10am	6 days	12.0	-2.9	Bailed Well	BC
5/27/2015	2:30pm	7 days	8.6	0.5		CH
5/28/2015	11:45am	8 days	8.7	0.4	Groundwater Sampled	CH

GROUNDWATER MONITORING REPORT

OW Number: B-4(OW)	Elevation Subtrahend : +9.4	Job No: 5938.9.00 Job Name: 205 Revere Beach Parkway

Date	Time	Elapsed Time	Depth of Water from Riser Top	Elevation of Water	Remarks	Read By
5/22/2015	3pm		10.5	-1.1	Initial Reading	JK
5/26/2015	11am	4 days	10.5	-1.1	Bailed Well	BC
5/27/2015	2 pm	5 days	9.7	-0.3		CH
5/28/2015	11 am	6 days	8.1	1.3	Groundwater Sampled	CH

Appendix B:
Pre-Construction Hydrology

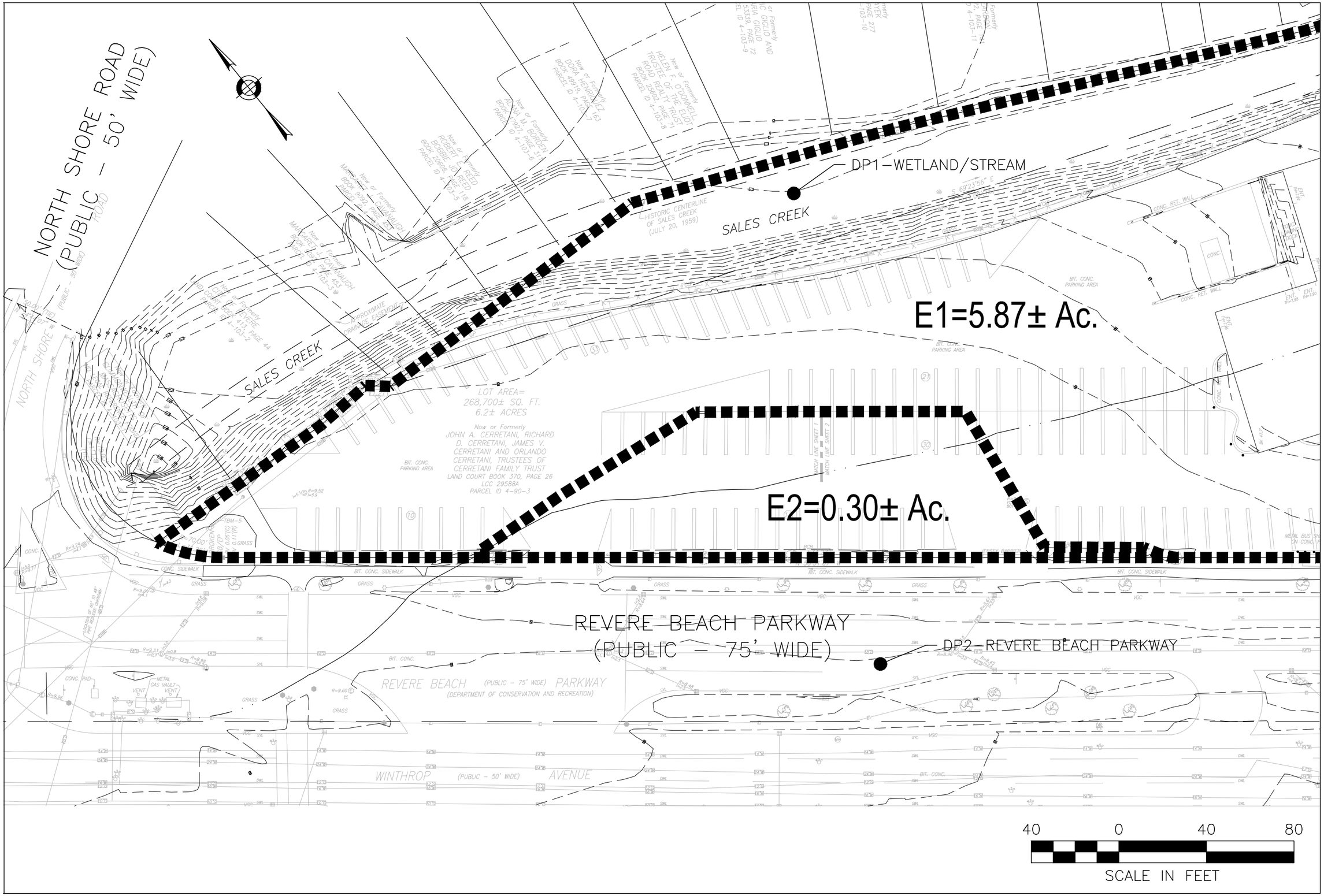

PRE–DEVELOPMENT DRAINAGE AREAS
205 REVERE BEACH PARKWAY

HOWARD STEIN HUDSON
11 Beacon Street, Suite 1010
Boston, MA 02108
www.hshassoc.com

FIGURE D.1

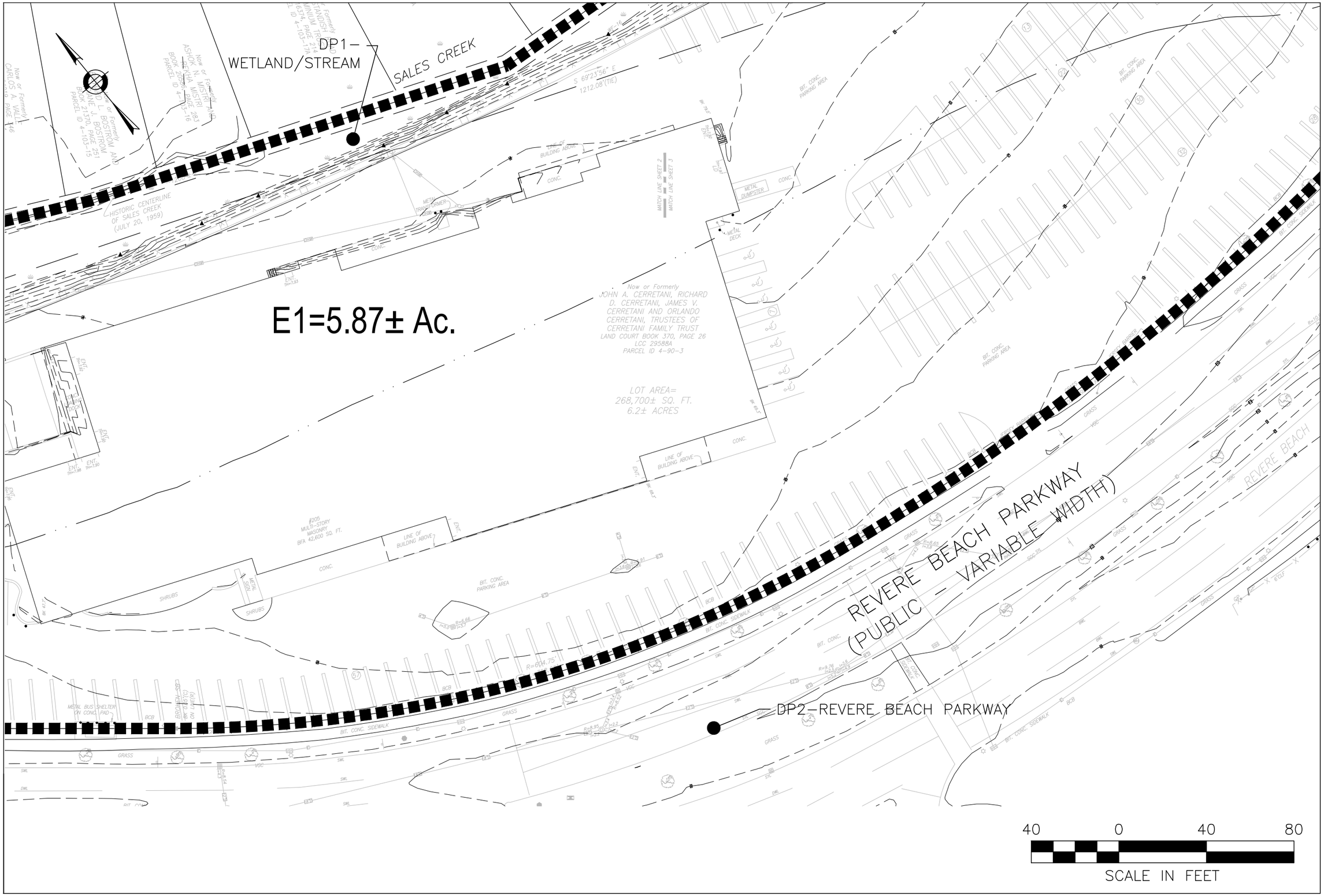

PRE–DEVELOPMENT DRAINAGE AREAS
205 REVERE BEACH PARKWAY

HOWARD STEIN HUDSON
11 Beacon Street, Suite 1010
Boston, MA 02108
www.hshassoc.com

FIGURE D.2

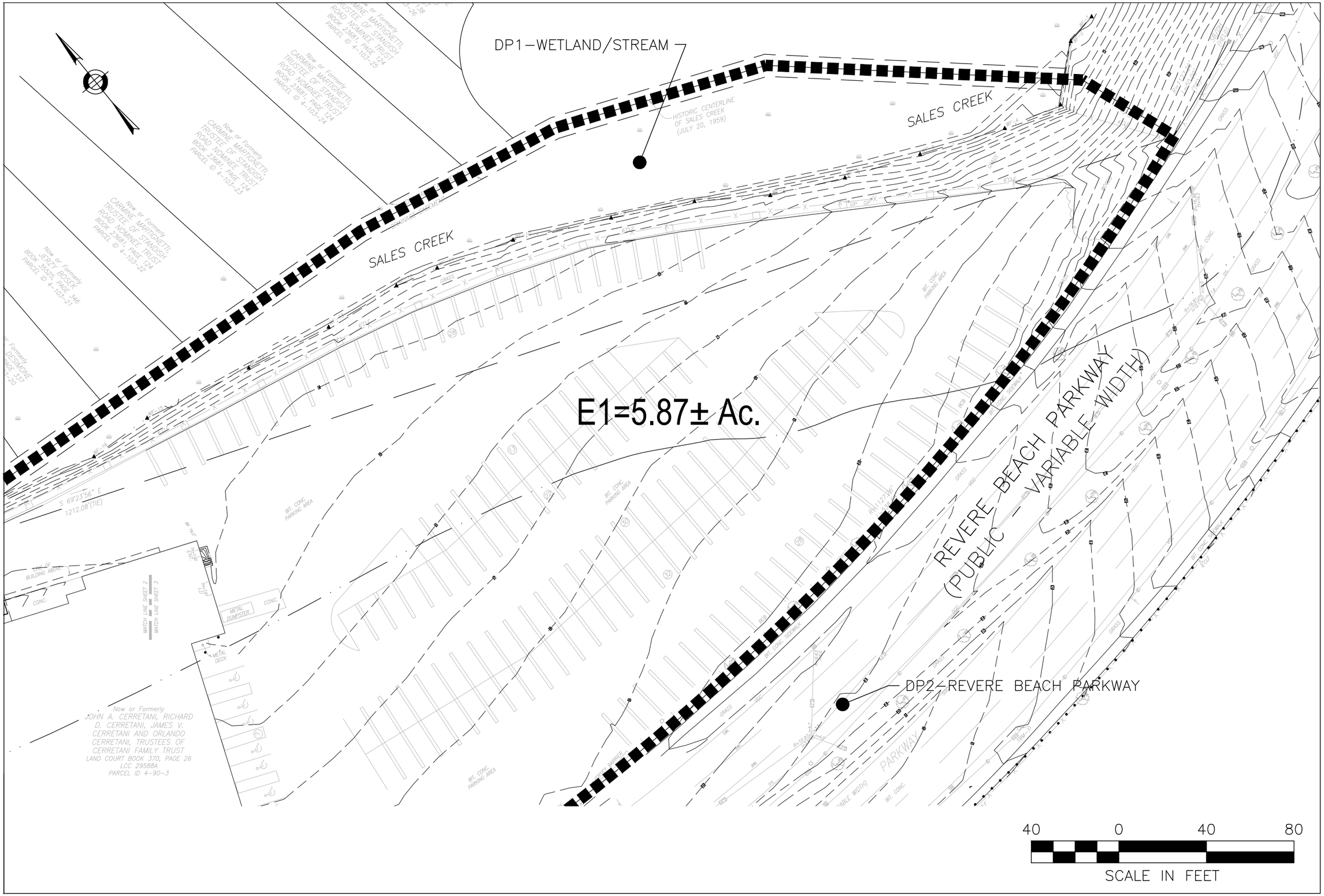

PRE–DEVELOPMENT DRAINAGE AREAS
205 REVERE BEACH PARKWAY

HOWARD STEIN HUDSON
11 Beacon Street, Suite 1010
Boston, MA 02108
www.hshassoc.com

FIGURE D.3

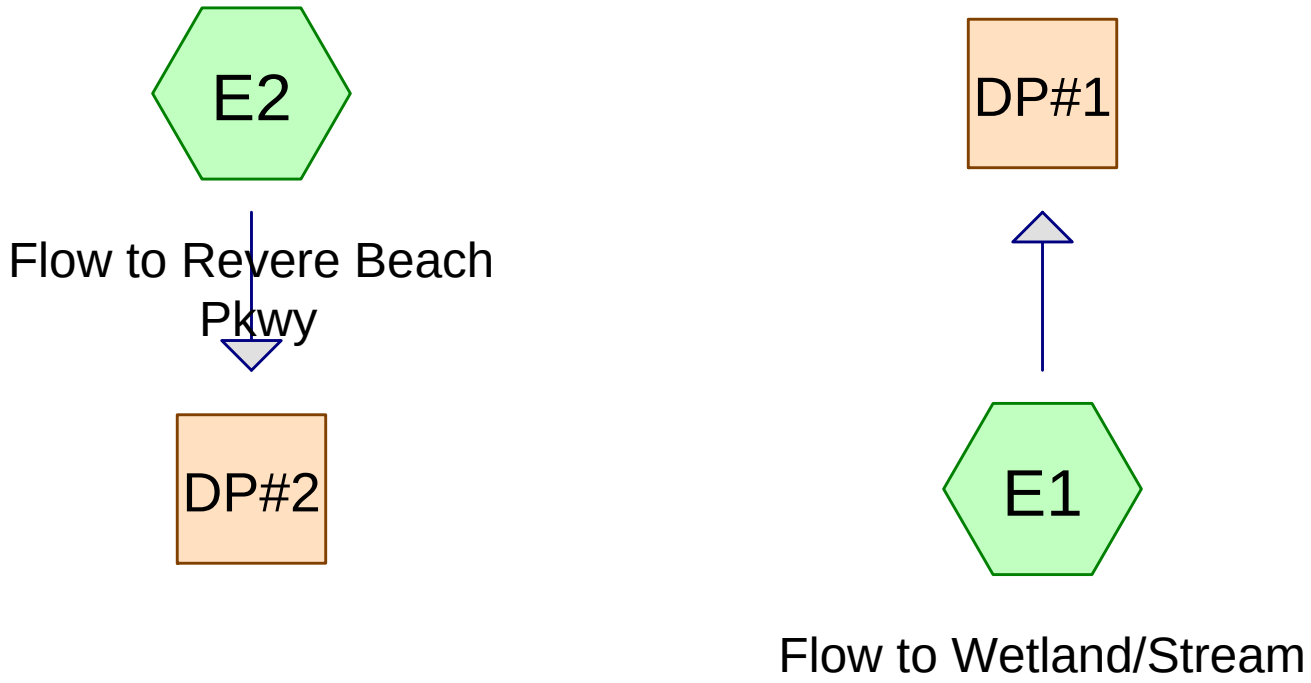

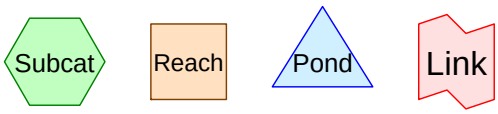

Routing Diagram for Pre-Construction Hydrology
Prepared by Howard Stein Hudson, Printed 12/21/2016
HydroCAD® 10.00-16 s/n 02930 © 2015 HydroCAD Software Solutions LLC

Area Listing (all nodes)

Area (acres)	CN	Description (subcatchment-numbers)
0.180	74	>75% Grass cover, Good, HSG C (E1, E2)
0.405	65	Brush, Good, HSG C (E1)
0.683	98	Creek (E1)
4.827	98	Paved parking, HSG C (E1, E2)
0.075	70	Woods, Good, HSG C (E1)
6.169	**95**	**TOTAL AREA**

Time span=0.00-24.00 hrs, dt=0.01 hrs, 2401 points
Runoff by SCS TR-20 method, UH=SCS, Weighted-CN
Reach routing by Stor-Ind+Trans method - Pond routing by Stor-Ind method

Subcatchment E1: Flow to Runoff Area=255,490 sf 89.09% Impervious Runoff Depth>2.64"
Flow Length=46' Tc=5.0 min CN=95 Runoff=17.82 cfs 1.292 af

Subcatchment E2: Flow to Revere Beach Runoff Area=13,252 sf 93.71% Impervious Runoff Depth>2.75"
Tc=5.0 min CN=96 Runoff=0.95 cfs 0.070 af

Reach DP#1: Inflow=17.82 cfs 1.292 af
Outflow=17.82 cfs 1.292 af

Reach DP#2: Inflow=0.95 cfs 0.070 af
Outflow=0.95 cfs 0.070 af

Total Runoff Area = 6.169 ac Runoff Volume = 1.361 af Average Runoff Depth = 2.65"
10.68% Pervious = 0.659 ac 89.32% Impervious = 5.510 ac

Summary for Subcatchment E1: Flow to Wetland/Stream

Runoff = 17.82 cfs @ 12.07 hrs, Volume= 1.292 af, Depth> 2.64"

Runoff by SCS TR-20 method, UH=SCS, Weighted-CN, Time Span= 0.00-24.00 hrs, dt= 0.01 hrs
Type III 24-hr 2-YR Rainfall=3.20"

	Area (sf)	CN	Description
	197,860	98	Paved parking, HSG C
	3,254	70	Woods, Good, HSG C
	7,006	74	>75% Grass cover, Good, HSG C
	17,621	65	Brush, Good, HSG C
*	29,749	98	Creek
	255,490	95	Weighted Average
	27,881		10.91% Pervious Area
	227,609		89.09% Impervious Area

Tc (min)	Length (feet)	Slope (ft/ft)	Velocity (ft/sec)	Capacity (cfs)	Description
5.0	46		0.15		**Direct Entry, Flow over pavement**

Summary for Subcatchment E2: Flow to Revere Beach Pkwy

Runoff = 0.95 cfs @ 12.07 hrs, Volume= 0.070 af, Depth> 2.75"

Runoff by SCS TR-20 method, UH=SCS, Weighted-CN, Time Span= 0.00-24.00 hrs, dt= 0.01 hrs
Type III 24-hr 2-YR Rainfall=3.20"

Area (sf)	CN	Description
12,418	98	Paved parking, HSG C
834	74	>75% Grass cover, Good, HSG C
13,252	96	Weighted Average
834		6.29% Pervious Area
12,418		93.71% Impervious Area

Tc (min)	Length (feet)	Slope (ft/ft)	Velocity (ft/sec)	Capacity (cfs)	Description
5.0					**Direct Entry,**

Summary for Reach DP#1:

Inflow Area = 5.865 ac, 89.09% Impervious, Inflow Depth > 2.64" for 2-YR event
Inflow = 17.82 cfs @ 12.07 hrs, Volume= 1.292 af
Outflow = 17.82 cfs @ 12.07 hrs, Volume= 1.292 af, Atten= 0%, Lag= 0.0 min

Routing by Stor-Ind+Trans method, Time Span= 0.00-24.00 hrs, dt= 0.01 hrs

Summary for Reach DP#2:

Inflow Area = 0.304 ac, 93.71% Impervious, Inflow Depth > 2.75" for 2-YR event
Inflow = 0.95 cfs @ 12.07 hrs, Volume= 0.070 af
Outflow = 0.95 cfs @ 12.07 hrs, Volume= 0.070 af, Atten= 0%, Lag= 0.0 min

Routing by Stor-Ind+Trans method, Time Span= 0.00-24.00 hrs, dt= 0.01 hrs

Time span=0.00-24.00 hrs, dt=0.01 hrs, 2401 points
Runoff by SCS TR-20 method, UH=SCS, Weighted-CN
Reach routing by Stor-Ind+Trans method - Pond routing by Stor-Ind method

Subcatchment E1: Flow to Runoff Area=255,490 sf 89.09% Impervious Runoff Depth>4.02"
Flow Length=46' Tc=5.0 min CN=95 Runoff=26.46 cfs 1.965 af

Subcatchment E2: Flow to Revere Beach Runoff Area=13,252 sf 93.71% Impervious Runoff Depth>4.13"
Tc=5.0 min CN=96 Runoff=1.39 cfs 0.105 af

Reach DP#1: Inflow=26.46 cfs 1.965 af
Outflow=26.46 cfs 1.965 af

Reach DP#2: Inflow=1.39 cfs 0.105 af
Outflow=1.39 cfs 0.105 af

Total Runoff Area = 6.169 ac Runoff Volume = 2.070 af Average Runoff Depth = 4.03"
10.68% Pervious = 0.659 ac 89.32% Impervious = 5.510 ac

Summary for Subcatchment E1: Flow to Wetland/Stream

Runoff = 26.46 cfs @ 12.07 hrs, Volume= 1.965 af, Depth> 4.02"

Runoff by SCS TR-20 method, UH=SCS, Weighted-CN, Time Span= 0.00-24.00 hrs, dt= 0.01 hrs
Type III 24-hr 10-YR Rainfall=4.60"

	Area (sf)	CN	Description
	197,860	98	Paved parking, HSG C
	3,254	70	Woods, Good, HSG C
	7,006	74	>75% Grass cover, Good, HSG C
	17,621	65	Brush, Good, HSG C
*	29,749	98	Creek
	255,490	95	Weighted Average
	27,881		10.91% Pervious Area
	227,609		89.09% Impervious Area

Tc (min)	Length (feet)	Slope (ft/ft)	Velocity (ft/sec)	Capacity (cfs)	Description
5.0	46		0.15		**Direct Entry, Flow over pavement**

Summary for Subcatchment E2: Flow to Revere Beach Pkwy

Runoff = 1.39 cfs @ 12.07 hrs, Volume= 0.105 af, Depth> 4.13"

Runoff by SCS TR-20 method, UH=SCS, Weighted-CN, Time Span= 0.00-24.00 hrs, dt= 0.01 hrs
Type III 24-hr 10-YR Rainfall=4.60"

Area (sf)	CN	Description
12,418	98	Paved parking, HSG C
834	74	>75% Grass cover, Good, HSG C
13,252	96	Weighted Average
834		6.29% Pervious Area
12,418		93.71% Impervious Area

Tc (min)	Length (feet)	Slope (ft/ft)	Velocity (ft/sec)	Capacity (cfs)	Description
5.0					**Direct Entry,**

Summary for Reach DP#1:

Inflow Area = 5.865 ac, 89.09% Impervious, Inflow Depth > 4.02" for 10-YR event
Inflow = 26.46 cfs @ 12.07 hrs, Volume= 1.965 af
Outflow = 26.46 cfs @ 12.07 hrs, Volume= 1.965 af, Atten= 0%, Lag= 0.0 min

Routing by Stor-Ind+Trans method, Time Span= 0.00-24.00 hrs, dt= 0.01 hrs

Summary for Reach DP#2:

Inflow Area = 0.304 ac, 93.71% Impervious, Inflow Depth > 4.13" for 10-YR event
Inflow = 1.39 cfs @ 12.07 hrs, Volume= 0.105 af
Outflow = 1.39 cfs @ 12.07 hrs, Volume= 0.105 af, Atten= 0%, Lag= 0.0 min

Routing by Stor-Ind+Trans method, Time Span= 0.00-24.00 hrs, dt= 0.01 hrs

Time span=0.00-24.00 hrs, dt=0.01 hrs, 2401 points
Runoff by SCS TR-20 method, UH=SCS, Weighted-CN
Reach routing by Stor-Ind+Trans method - Pond routing by Stor-Ind method

Subcatchment E1: Flow to Runoff Area=255,490 sf 89.09% Impervious Runoff Depth>6.40"
Flow Length=46' Tc=5.0 min CN=95 Runoff=41.09 cfs 3.129 af

Subcatchment E2: Flow to Revere Beach Runoff Area=13,252 sf 93.71% Impervious Runoff Depth>6.52"
Tc=5.0 min CN=96 Runoff=2.15 cfs 0.165 af

Reach DP#1: Inflow=41.09 cfs 3.129 af
Outflow=41.09 cfs 3.129 af

Reach DP#2: Inflow=2.15 cfs 0.165 af
Outflow=2.15 cfs 0.165 af

Total Runoff Area = 6.169 ac Runoff Volume = 3.294 af Average Runoff Depth = 6.41"
10.68% Pervious = 0.659 ac 89.32% Impervious = 5.510 ac

Summary for Subcatchment E1: Flow to Wetland/Stream

Runoff = 41.09 cfs @ 12.07 hrs, Volume= 3.129 af, Depth> 6.40"

Runoff by SCS TR-20 method, UH=SCS, Weighted-CN, Time Span= 0.00-24.00 hrs, dt= 0.01 hrs
Type III 24-hr 100-YR Rainfall=7.00"

	Area (sf)	CN	Description
	197,860	98	Paved parking, HSG C
	3,254	70	Woods, Good, HSG C
	7,006	74	>75% Grass cover, Good, HSG C
	17,621	65	Brush, Good, HSG C
*	29,749	98	Creek
	255,490	95	Weighted Average
	27,881		10.91% Pervious Area
	227,609		89.09% Impervious Area

Tc (min)	Length (feet)	Slope (ft/ft)	Velocity (ft/sec)	Capacity (cfs)	Description
5.0	46		0.15		**Direct Entry, Flow over pavement**

Summary for Subcatchment E2: Flow to Revere Beach Pkwy

Runoff = 2.15 cfs @ 12.07 hrs, Volume= 0.165 af, Depth> 6.52"

Runoff by SCS TR-20 method, UH=SCS, Weighted-CN, Time Span= 0.00-24.00 hrs, dt= 0.01 hrs
Type III 24-hr 100-YR Rainfall=7.00"

	Area (sf)	CN	Description
	12,418	98	Paved parking, HSG C
	834	74	>75% Grass cover, Good, HSG C
	13,252	96	Weighted Average
	834		6.29% Pervious Area
	12,418		93.71% Impervious Area

Tc (min)	Length (feet)	Slope (ft/ft)	Velocity (ft/sec)	Capacity (cfs)	Description
5.0					**Direct Entry,**

Summary for Reach DP#1:

Inflow Area = 5.865 ac, 89.09% Impervious, Inflow Depth > 6.40" for 100-YR event
Inflow = 41.09 cfs @ 12.07 hrs, Volume= 3.129 af
Outflow = 41.09 cfs @ 12.07 hrs, Volume= 3.129 af, Atten= 0%, Lag= 0.0 min

Routing by Stor-Ind+Trans method, Time Span= 0.00-24.00 hrs, dt= 0.01 hrs

Summary for Reach DP#2:

Inflow Area = 0.304 ac, 93.71% Impervious, Inflow Depth > 6.52" for 100-YR event
Inflow = 2.15 cfs @ 12.07 hrs, Volume= 0.165 af
Outflow = 2.15 cfs @ 12.07 hrs, Volume= 0.165 af, Atten= 0%, Lag= 0.0 min

Routing by Stor-Ind+Trans method, Time Span= 0.00-24.00 hrs, dt= 0.01 hrs

Appendix C:
Post-Construction Hydrology

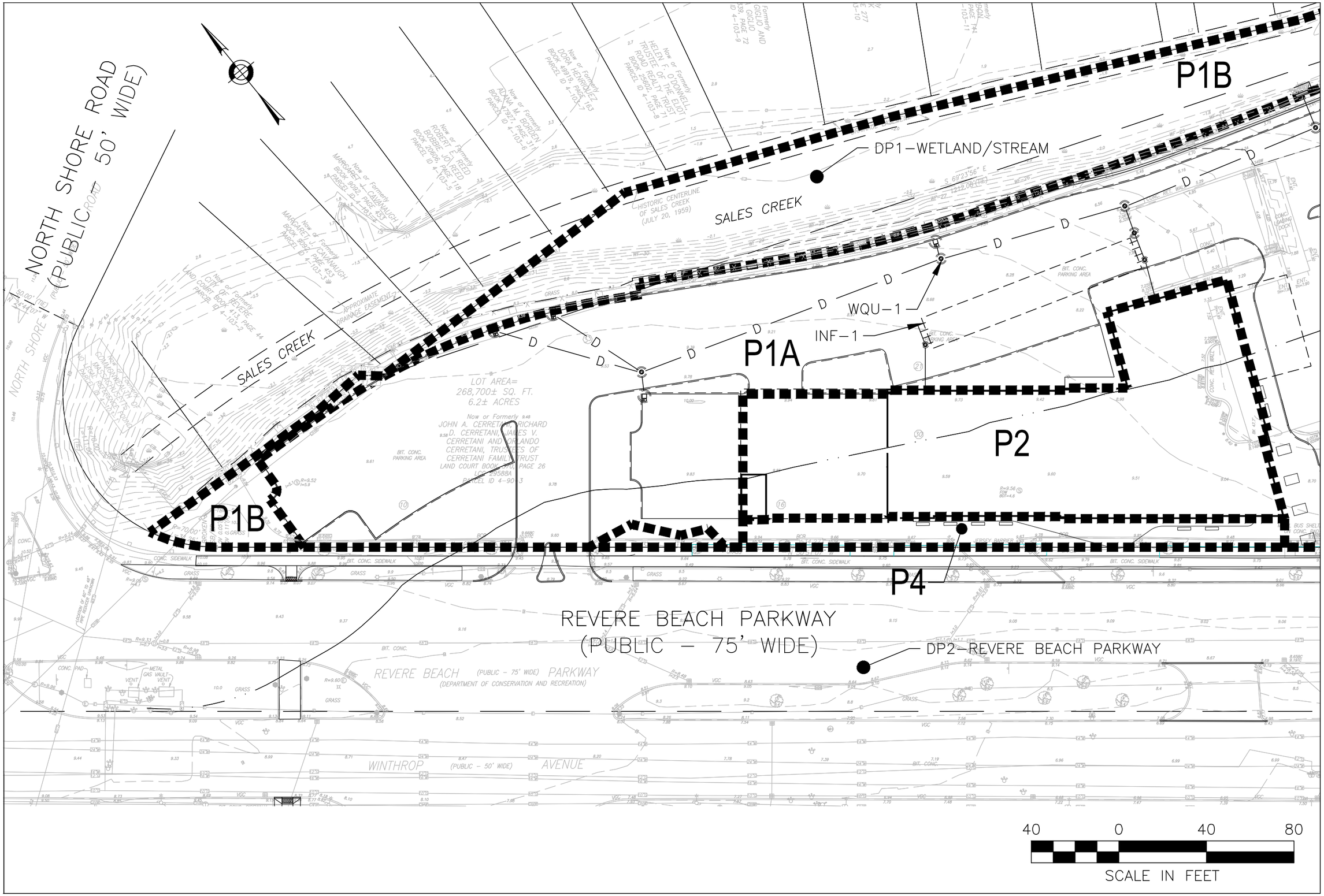

POST–DEVELOPMENT DRAINAGE AREAS
205 REVERE BEACH PARKWAY

HOWARD STEIN HUDSON
11 Beacon Street, Suite 1010
Boston, MA 02108
www.hshassoc.com

FIGURE D.4

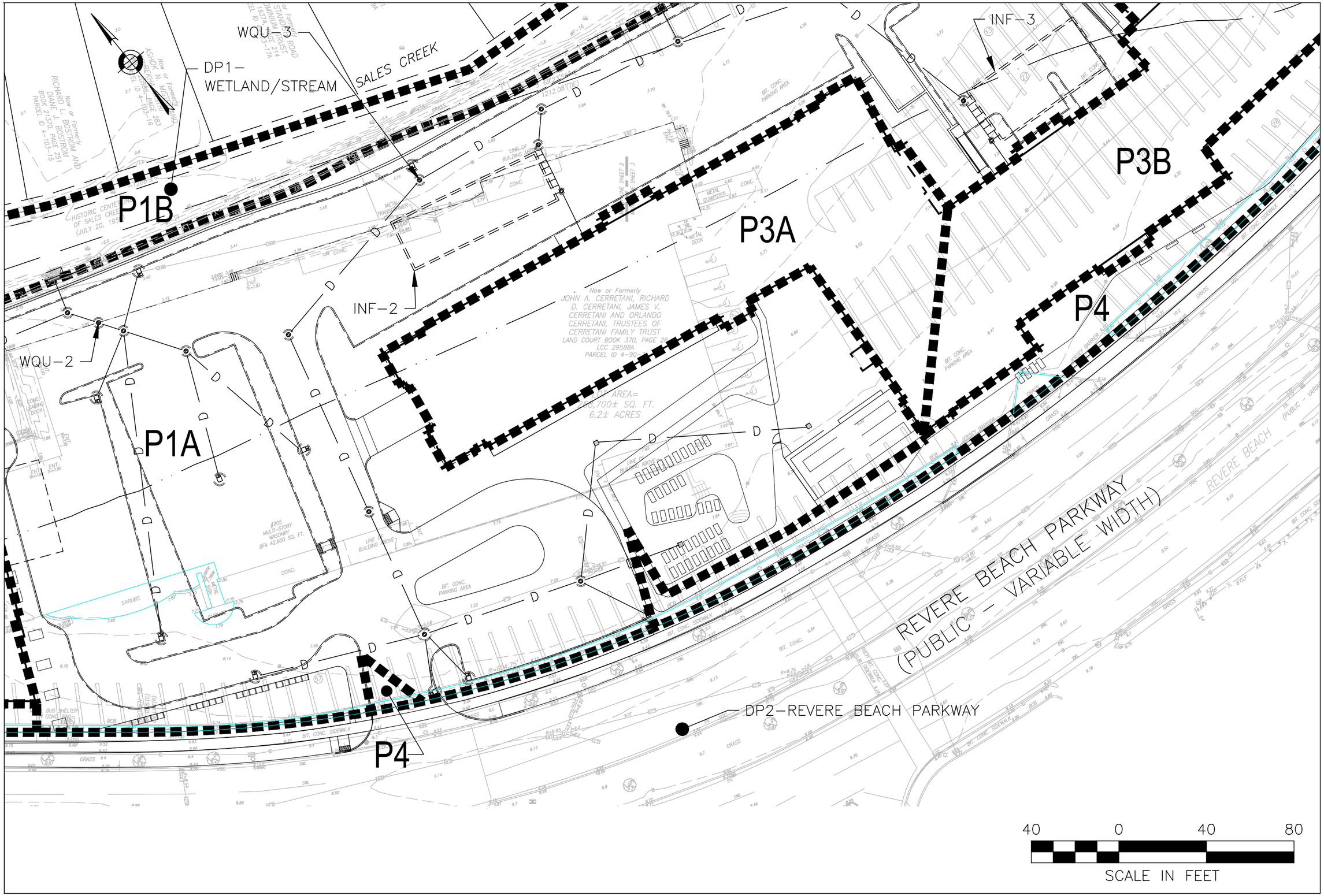

POST-DEVELOPMENT DRAINAGE AREAS
205 REVERE BEACH PARKWAY

HOWARD STEIN HUDSON
11 Beacon Street, Suite 1010
Boston, MA 02108
www.hshassoc.com

FIGURE
D.5

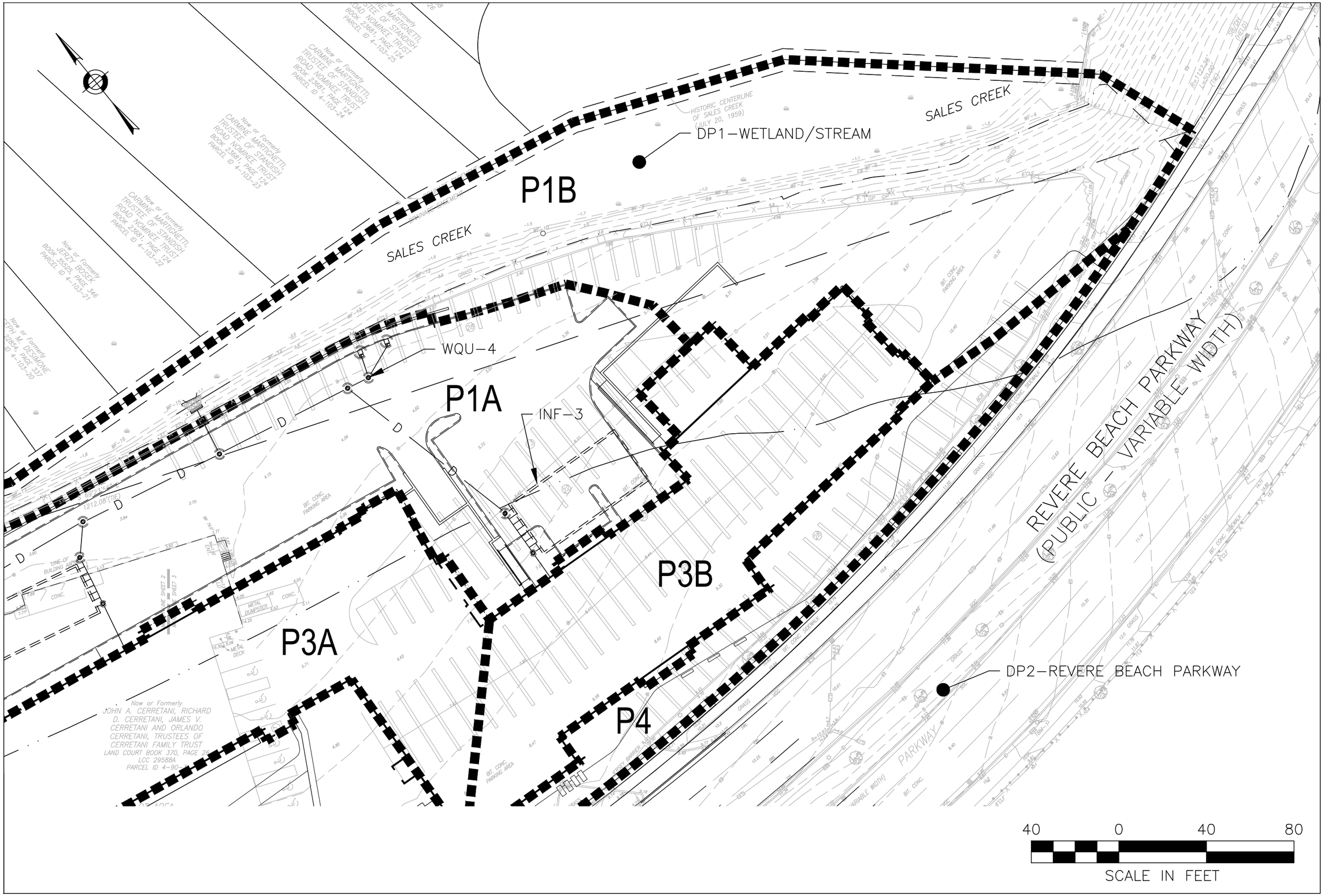

POST–DEVELOPMENT DRAINAGE AREAS
205 REVERE BEACH PARKWAY

HOWARD STEIN HUDSON
11 Beacon Street, Suite 1010
Boston, MA 02108
www.hshassoc.com

FIGURE
D.6

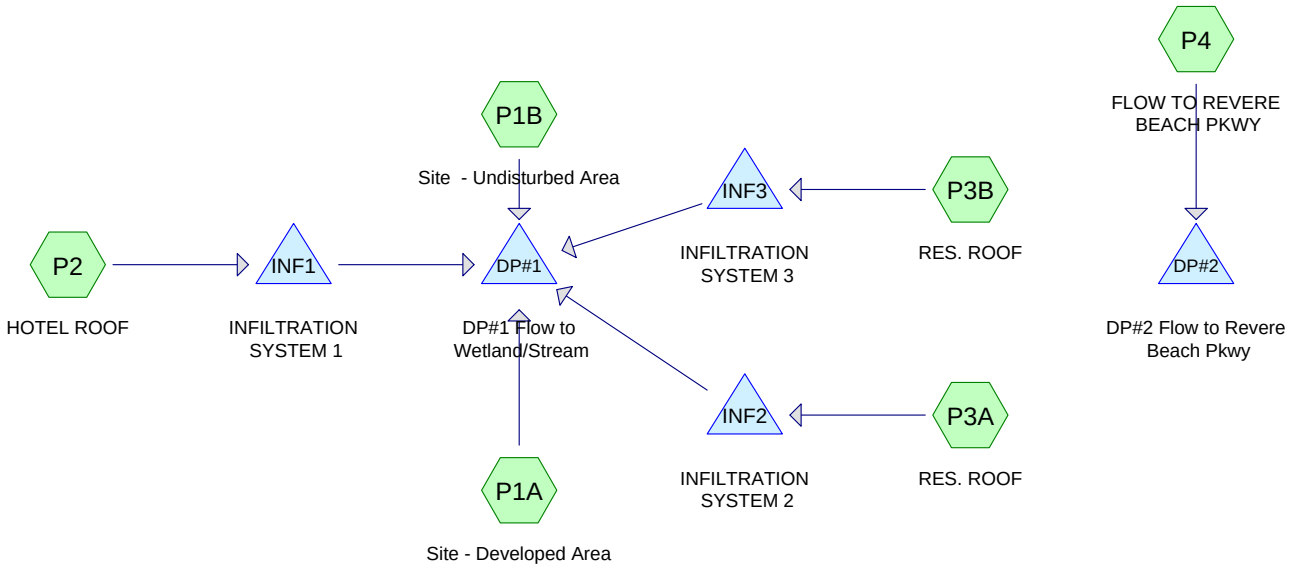

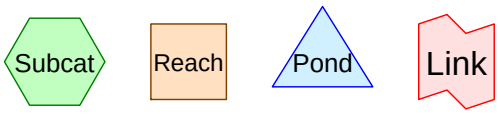

Routing Diagram for Post-construction Hydrology
Prepared by Howard Stein Hudson, Printed 12/21/2016
HydroCAD® 10.00-16 s/n 02930 © 2015 HydroCAD Software Solutions LLC

Area Listing (all nodes)

Area (acres)	CN	Description (subcatchment-numbers)
1.012	74	>75% Grass cover, Good, HSG C (P1A, P1B, P4)
0.356	65	Brush, Good, HSG C (P1B)
0.683	98	Creek (P1B)
2.872	98	Paved parking, HSG C (P1A, P1B, P4)
0.852	98	Roof (P3A, P3B)
0.379	98	Roof, HSG C (P2)
0.016	70	Woods, Good, HSG C (P1B)
6.169	**92**	**TOTAL AREA**

Time span=0.00-24.00 hrs, dt=0.01 hrs, 2401 points
Runoff by SCS TR-20 method, UH=SCS, Weighted-CN
Reach routing by Stor-Ind+Trans method - Pond routing by Stor-Ind method

Subcatchment P1A: Site - Developed Area Runoff Area=135,150 sf 86.30% Impervious Runoff Depth>2.64"
Tc=5.0 min CN=95 Runoff=9.43 cfs 0.683 af

Subcatchment P1B: Site - Undisturbed Runoff Area=63,972 sf 46.92% Impervious Runoff Depth>1.61"
Tc=5.0 min CN=83 Runoff=2.87 cfs 0.197 af

Subcatchment P2: HOTEL ROOF Runoff Area=16,488 sf 100.00% Impervious Runoff Depth>2.97"
Tc=5.0 min CN=98 Runoff=1.22 cfs 0.094 af

Subcatchment P3A: RES. ROOF Runoff Area=19,191 sf 100.00% Impervious Runoff Depth>2.97"
Tc=5.0 min CN=98 Runoff=1.42 cfs 0.109 af

Subcatchment P3B: RES. ROOF Runoff Area=17,910 sf 100.00% Impervious Runoff Depth>2.97"
Tc=5.0 min CN=98 Runoff=1.32 cfs 0.102 af

Subcatchment P4: FLOW TO REVERE Runoff Area=16,025 sf 51.29% Impervious Runoff Depth>1.83"
Tc=5.0 min CN=86 Runoff=0.82 cfs 0.056 af

Pond DP#1: DP#1 Flow to Wetland/Stream Inflow=14.80 cfs 0.998 af
Primary=14.80 cfs 0.998 af

Pond DP#2: DP#2 Flow to Revere Beach Pkwy Inflow=0.82 cfs 0.056 af
Primary=0.82 cfs 0.056 af

Pond INF1: INFILTRATION SYSTEM 1 Peak Elev=7.71' Storage=1,510 cf Inflow=1.22 cfs 0.094 af
Discarded=0.02 cfs 0.025 af Primary=1.10 cfs 0.037 af Outflow=1.12 cfs 0.062 af

Pond INF2: INFILTRATION SYSTEM 2 Peak Elev=7.72' Storage=1,852 cf Inflow=1.42 cfs 0.109 af
Discarded=0.02 cfs 0.030 af Primary=1.14 cfs 0.041 af Outflow=1.17 cfs 0.071 af

Pond INF3: INFILTRATION SYSTEM 3 Peak Elev=7.72' Storage=1,694 cf Inflow=1.32 cfs 0.102 af
Discarded=0.02 cfs 0.028 af Primary=1.13 cfs 0.039 af Outflow=1.15 cfs 0.067 af

Total Runoff Area = 6.169 ac Runoff Volume = 1.240 af Average Runoff Depth = 2.41"
22.43% Pervious = 1.384 ac 77.57% Impervious = 4.785 ac

Summary for Subcatchment P1A: Site - Developed Area

Runoff = 9.43 cfs @ 12.07 hrs, Volume= 0.683 af, Depth> 2.64"

Runoff by SCS TR-20 method, UH=SCS, Weighted-CN, Time Span= 0.00-24.00 hrs, dt= 0.01 hrs
Type III 24-hr 2-YR Rainfall=3.20"

Area (sf)	CN	Description
116,630	98	Paved parking, HSG C
18,520	74	>75% Grass cover, Good, HSG C
135,150	95	Weighted Average
18,520		13.70% Pervious Area
116,630		86.30% Impervious Area

Tc (min)	Length (feet)	Slope (ft/ft)	Velocity (ft/sec)	Capacity (cfs)	Description
5.0					**Direct Entry, Flow over pavement**

Summary for Subcatchment P1B: Site - Undisturbed Area

Runoff = 2.87 cfs @ 12.08 hrs, Volume= 0.197 af, Depth> 1.61"

Runoff by SCS TR-20 method, UH=SCS, Weighted-CN, Time Span= 0.00-24.00 hrs, dt= 0.01 hrs
Type III 24-hr 2-YR Rainfall=3.20"

	Area (sf)	CN	Description
	17,749	74	>75% Grass cover, Good, HSG C
	262	98	Paved parking, HSG C
	703	70	Woods, Good, HSG C
	15,507	65	Brush, Good, HSG C
*	29,751	98	Creek
	63,972	83	Weighted Average
	33,959		53.08% Pervious Area
	30,013		46.92% Impervious Area

Tc (min)	Length (feet)	Slope (ft/ft)	Velocity (ft/sec)	Capacity (cfs)	Description
5.0					**Direct Entry, Flow over pavement**

Summary for Subcatchment P2: HOTEL ROOF

Runoff = 1.22 cfs @ 12.07 hrs, Volume= 0.094 af, Depth> 2.97"

Runoff by SCS TR-20 method, UH=SCS, Weighted-CN, Time Span= 0.00-24.00 hrs, dt= 0.01 hrs
Type III 24-hr 2-YR Rainfall=3.20"

	Area (sf)	CN	Description
*	16,488	98	Roof, HSG C
	16,488		100.00% Impervious Area

Tc (min)	Length (feet)	Slope (ft/ft)	Velocity (ft/sec)	Capacity (cfs)	Description
5.0					**Direct Entry, Flow over pavement**

Summary for Subcatchment P3A: RES. ROOF

Runoff = 1.42 cfs @ 12.07 hrs, Volume= 0.109 af, Depth> 2.97"

Runoff by SCS TR-20 method, UH=SCS, Weighted-CN, Time Span= 0.00-24.00 hrs, dt= 0.01 hrs
Type III 24-hr 2-YR Rainfall=3.20"

	Area (sf)	CN	Description
*	19,191	98	Roof
	19,191		100.00% Impervious Area

Tc (min)	Length (feet)	Slope (ft/ft)	Velocity (ft/sec)	Capacity (cfs)	Description
5.0					**Direct Entry, Flow over pavement**

Summary for Subcatchment P3B: RES. ROOF

Runoff = 1.32 cfs @ 12.07 hrs, Volume= 0.102 af, Depth> 2.97"

Runoff by SCS TR-20 method, UH=SCS, Weighted-CN, Time Span= 0.00-24.00 hrs, dt= 0.01 hrs
Type III 24-hr 2-YR Rainfall=3.20"

	Area (sf)	CN	Description
*	17,910	98	Roof
	17,910		100.00% Impervious Area

Tc (min)	Length (feet)	Slope (ft/ft)	Velocity (ft/sec)	Capacity (cfs)	Description
5.0					**Direct Entry, Flow over pavement**

Summary for Subcatchment P4: FLOW TO REVERE BEACH PKWY

Runoff = 0.82 cfs @ 12.07 hrs, Volume= 0.056 af, Depth> 1.83"

Runoff by SCS TR-20 method, UH=SCS, Weighted-CN, Time Span= 0.00-24.00 hrs, dt= 0.01 hrs
Type III 24-hr 2-YR Rainfall=3.20"

Area (sf)	CN	Description
7,805	74	>75% Grass cover, Good, HSG C
8,220	98	Paved parking, HSG C
16,025	86	Weighted Average
7,805		48.71% Pervious Area
8,220		51.29% Impervious Area

Tc (min)	Length (feet)	Slope (ft/ft)	Velocity (ft/sec)	Capacity (cfs)	Description
5.0					**Direct Entry, Flow over pavement**

Summary for Pond DP#1: DP#1 Flow to Wetland/Stream

Inflow Area = 5.801 ac, 79.23% Impervious, Inflow Depth > 2.06" for 2-YR event
Inflow = 14.80 cfs @ 12.09 hrs, Volume= 0.998 af
Primary = 14.80 cfs @ 12.09 hrs, Volume= 0.998 af, Atten= 0%, Lag= 0.0 min

Routing by Stor-Ind method, Time Span= 0.00-24.00 hrs, dt= 0.01 hrs

Summary for Pond DP#2: DP#2 Flow to Revere Beach Pkwy

Inflow Area = 0.368 ac, 51.29% Impervious, Inflow Depth > 1.83" for 2-YR event
Inflow = 0.82 cfs @ 12.07 hrs, Volume= 0.056 af
Primary = 0.82 cfs @ 12.07 hrs, Volume= 0.056 af, Atten= 0%, Lag= 0.0 min

Routing by Stor-Ind method, Time Span= 0.00-24.00 hrs, dt= 0.01 hrs

Summary for Pond INF1: INFILTRATION SYSTEM 1

Inflow Area = 0.379 ac,100.00% Impervious, Inflow Depth > 2.97" for 2-YR event
Inflow = 1.22 cfs @ 12.07 hrs, Volume= 0.094 af
Outflow = 1.12 cfs @ 12.10 hrs, Volume= 0.062 af, Atten= 8%, Lag= 2.0 min
Discarded = 0.02 cfs @ 12.10 hrs, Volume= 0.025 af
Primary = 1.10 cfs @ 12.10 hrs, Volume= 0.037 af

Routing by Stor-Ind method, Time Span= 0.00-24.00 hrs, dt= 0.01 hrs
Peak Elev= 7.71' @ 12.10 hrs Surf.Area= 1,515 sf Storage= 1,510 cf

Plug-Flow detention time= 167.8 min calculated for 0.062 af (67% of inflow)
Center-of-Mass det. time= 70.0 min (825.0 - 755.0)

Volume	Invert	Avail.Storage	Storage Description
#1A	5.67'	812 cf	**14.83'W x 102.12'L x 2.33'H Field A** 3,534 cf Overall - 829 cf Embedded = 2,705 cf x 30.0% Voids
#2A	6.17'	829 cf	**ADS_StormTech SC-310** x 56 Inside #1 Effective Size= 28.9"W x 16.0"H => 2.07 sf x 7.12'L = 14.7 cf Overall Size= 34.0"W x 16.0"H x 7.56'L with 0.44' Overlap Row Length Adjustment= +0.44' x 2.07 sf x 4 rows
#3	5.67'	3 cf	**1.00'D x 4.33'H Vertical Cone/Cylinder**-Impervious
		1,644 cf	Total Available Storage

Storage Group A created with Chamber Wizard

Device	Routing	Invert	Outlet Devices
#1	Primary	5.67'	**12.0" Round Culvert** L= 12.0' CPP, projecting, no headwall, Ke= 0.900 Inlet / Outlet Invert= 5.67' / 5.47' S= 0.0167 '/' Cc= 0.900 n= 0.010 PVC, smooth interior, Flow Area= 0.79 sf
#2	Device 1	7.50'	**4.0' long x 0.5' breadth Broad-Crested Rectangular Weir** Head (feet) 0.20 0.40 0.60 0.80 1.00 Coef. (English) 2.80 2.92 3.08 3.30 3.32
#3	Discarded	5.67'	**0.270 in/hr Exfiltration over Surface area** Conductivity to Groundwater Elevation = 3.50'

Discarded OutFlow Max=0.02 cfs @ 12.10 hrs HW=7.71' (Free Discharge)
└─**3=Exfiltration** (Controls 0.02 cfs)

Primary OutFlow Max=1.09 cfs @ 12.10 hrs HW=7.71' (Free Discharge)
└─**1=Culvert** (Passes 1.09 cfs of 3.71 cfs potential flow)
└─**2=Broad-Crested Rectangular Weir** (Weir Controls 1.09 cfs @ 1.29 fps)

Summary for Pond INF2: INFILTRATION SYSTEM 2

Inflow Area = 0.441 ac,100.00% Impervious, Inflow Depth > 2.97" for 2-YR event
Inflow = 1.42 cfs @ 12.07 hrs, Volume= 0.109 af
Outflow = 1.17 cfs @ 12.12 hrs, Volume= 0.071 af, Atten= 18%, Lag= 3.1 min
Discarded = 0.02 cfs @ 12.12 hrs, Volume= 0.030 af
Primary = 1.14 cfs @ 12.12 hrs, Volume= 0.041 af

Routing by Stor-Ind method, Time Span= 0.00-24.00 hrs, dt= 0.01 hrs
Peak Elev= 7.72' @ 12.12 hrs Surf.Area= 1,829 sf Storage= 1,852 cf

Plug-Flow detention time= 174.1 min calculated for 0.071 af (65% of inflow)
Center-of-Mass det. time= 73.8 min (828.8 - 755.0)

Volume	Invert	Avail.Storage	Storage Description
#1A	5.67'	969 cf	**24.83'W x 73.64'L x 2.33'H Field A** 4,267 cf Overall - 1,038 cf Embedded = 3,229 cf x 30.0% Voids
#2A	6.17'	1,038 cf	**ADS_StormTech SC-310** x 70 Inside #1 Effective Size= 28.9"W x 16.0"H => 2.07 sf x 7.12'L = 14.7 cf Overall Size= 34.0"W x 16.0"H x 7.56'L with 0.44' Overlap Row Length Adjustment= +0.44' x 2.07 sf x 7 rows
#3	5.67'	3 cf	**1.00'D x 3.73'H Vertical Cone/Cylinder**-Impervious
		2,010 cf	Total Available Storage

Storage Group A created with Chamber Wizard

Device	Routing	Invert	Outlet Devices
#1	Primary	5.76'	**12.0" Round Culvert** L= 13.0' CPP, projecting, no headwall, Ke= 0.900 Inlet / Outlet Invert= 5.76' / 5.50' S= 0.0200 '/' Cc= 0.900 n= 0.010 PVC, smooth interior, Flow Area= 0.79 sf
#2	Device 1	7.50'	**4.0' long x 0.5' breadth Broad-Crested Rectangular Weir**

			Head (feet) 0.20 0.40 0.60 0.80 1.00
			Coef. (English) 2.80 2.92 3.08 3.30 3.32
#3	Discarded	5.67'	**0.270 in/hr Exfiltration over Surface area**
			Conductivity to Groundwater Elevation = 3.50'

Discarded OutFlow Max=0.02 cfs @ 12.12 hrs HW=7.72' (Free Discharge)
└─**3=Exfiltration** (Controls 0.02 cfs)

Primary OutFlow Max=1.14 cfs @ 12.12 hrs HW=7.72' (Free Discharge)
└─**1=Culvert** (Passes 1.14 cfs of 3.60 cfs potential flow)
└─**2=Broad-Crested Rectangular Weir** (Weir Controls 1.14 cfs @ 1.31 fps)

Summary for Pond INF3: INFILTRATION SYSTEM 3

Inflow Area =	0.411 ac,100.00% Impervious, Inflow Depth > 2.97" for 2-YR event			
Inflow =	1.32 cfs @	12.07 hrs, Volume=	0.102 af	
Outflow =	1.15 cfs @	12.11 hrs, Volume=	0.067 af, Atten= 13%, Lag= 2.6 min	
Discarded =	0.02 cfs @	12.11 hrs, Volume=	0.028 af	
Primary =	1.13 cfs @	12.11 hrs, Volume=	0.039 af	

Routing by Stor-Ind method, Time Span= 0.00-24.00 hrs, dt= 0.01 hrs
Peak Elev= 7.72' @ 12.11 hrs Surf.Area= 1,674 sf Storage= 1,694 cf

Plug-Flow detention time= 171.4 min calculated for 0.067 af (66% of inflow)
Center-of-Mass det. time= 72.2 min (827.2 - 755.0)

Volume	Invert	Avail.Storage	Storage Description
#1A	5.67'	886 cf	**28.17'W x 59.40'L x 2.33'H Field A**
			3,904 cf Overall - 951 cf Embedded = 2,953 cf x 30.0% Voids
#2A	6.17'	951 cf	**ADS_StormTech SC-310** x 64 Inside #1
			Effective Size= 28.9"W x 16.0"H => 2.07 sf x 7.12'L = 14.7 cf
			Overall Size= 34.0"W x 16.0"H x 7.56'L with 0.44' Overlap
			Row Length Adjustment= +0.44' x 2.07 sf x 8 rows
#3	5.67'	3 cf	**1.00'D x 4.00'H Vertical Cone/Cylinder**
		1,840 cf	Total Available Storage

Storage Group A created with Chamber Wizard

Device	Routing	Invert	Outlet Devices
#1	Primary	6.25'	**12.0" Round Culvert**
			L= 83.0' CPP, projecting, no headwall, Ke= 0.900
			Inlet / Outlet Invert= 6.25' / 2.41' S= 0.0463 '/' Cc= 0.900
			n= 0.010 PVC, smooth interior, Flow Area= 0.79 sf
#2	Device 1	7.50'	**4.0' long x 0.5' breadth Broad-Crested Rectangular Weir**
			Head (feet) 0.20 0.40 0.60 0.80 1.00
			Coef. (English) 2.80 2.92 3.08 3.30 3.32
#3	Discarded	5.67'	**0.270 in/hr Exfiltration over Surface area**
			Conductivity to Groundwater Elevation = 3.50'

Discarded OutFlow Max=0.02 cfs @ 12.11 hrs HW=7.71' (Free Discharge)
└─**3=Exfiltration** (Controls 0.02 cfs)

Primary OutFlow Max=1.12 cfs @ 12.11 hrs HW=7.71' (Free Discharge)
└─**1=Culvert** (Passes 1.12 cfs of 2.93 cfs potential flow)
└─**2=Broad-Crested Rectangular Weir** (Weir Controls 1.12 cfs @ 1.30 fps)

Time span=0.00-24.00 hrs, dt=0.01 hrs, 2401 points
Runoff by SCS TR-20 method, UH=SCS, Weighted-CN
Reach routing by Stor-Ind+Trans method - Pond routing by Stor-Ind method

Subcatchment P1A: Site - Developed Area Runoff Area=135,150 sf 86.30% Impervious Runoff Depth>4.02"
Tc=5.0 min CN=95 Runoff=14.00 cfs 1.040 af

Subcatchment P1B: Site - Undisturbed Runoff Area=63,972 sf 46.92% Impervious Runoff Depth>2.81"
Tc=5.0 min CN=83 Runoff=5.01 cfs 0.344 af

Subcatchment P2: HOTEL ROOF Runoff Area=16,488 sf 100.00% Impervious Runoff Depth>4.36"
Tc=5.0 min CN=98 Runoff=1.76 cfs 0.138 af

Subcatchment P3A: RES. ROOF Runoff Area=19,191 sf 100.00% Impervious Runoff Depth>4.36"
Tc=5.0 min CN=98 Runoff=2.05 cfs 0.160 af

Subcatchment P3B: RES. ROOF Runoff Area=17,910 sf 100.00% Impervious Runoff Depth>4.36"
Tc=5.0 min CN=98 Runoff=1.91 cfs 0.149 af

Subcatchment P4: FLOW TO REVERE Runoff Area=16,025 sf 51.29% Impervious Runoff Depth>3.09"
Tc=5.0 min CN=86 Runoff=1.37 cfs 0.095 af

Pond DP#1: DP#1 Flow to Wetland/Stream Inflow=24.50 cfs 1.634 af
Primary=24.50 cfs 1.634 af

Pond DP#2: DP#2 Flow to Revere Beach Pkwy Inflow=1.37 cfs 0.095 af
Primary=1.37 cfs 0.095 af

Pond INF1: INFILTRATION SYSTEM 1 Peak Elev=7.78' Storage=1,542 cf Inflow=1.76 cfs 0.138 af
Discarded=0.02 cfs 0.027 af Primary=1.72 cfs 0.078 af Outflow=1.73 cfs 0.105 af

Pond INF2: INFILTRATION SYSTEM 2 Peak Elev=7.81' Storage=1,903 cf Inflow=2.05 cfs 0.160 af
Discarded=0.02 cfs 0.032 af Primary=1.99 cfs 0.088 af Outflow=2.01 cfs 0.121 af

Pond INF3: INFILTRATION SYSTEM 3 Peak Elev=7.80' Storage=1,735 cf Inflow=1.91 cfs 0.149 af
Discarded=0.02 cfs 0.030 af Primary=1.86 cfs 0.084 af Outflow=1.88 cfs 0.113 af

Total Runoff Area = 6.169 ac Runoff Volume = 1.926 af Average Runoff Depth = 3.75"
22.43% Pervious = 1.384 ac 77.57% Impervious = 4.785 ac

Summary for Subcatchment P1A: Site - Developed Area

Runoff = 14.00 cfs @ 12.07 hrs, Volume= 1.040 af, Depth> 4.02"

Runoff by SCS TR-20 method, UH=SCS, Weighted-CN, Time Span= 0.00-24.00 hrs, dt= 0.01 hrs
Type III 24-hr 10-YR Rainfall=4.60"

Area (sf)	CN	Description
116,630	98	Paved parking, HSG C
18,520	74	>75% Grass cover, Good, HSG C
135,150	95	Weighted Average
18,520		13.70% Pervious Area
116,630		86.30% Impervious Area

Tc (min)	Length (feet)	Slope (ft/ft)	Velocity (ft/sec)	Capacity (cfs)	Description
5.0					**Direct Entry, Flow over pavement**

Summary for Subcatchment P1B: Site - Undisturbed Area

Runoff = 5.01 cfs @ 12.07 hrs, Volume= 0.344 af, Depth> 2.81"

Runoff by SCS TR-20 method, UH=SCS, Weighted-CN, Time Span= 0.00-24.00 hrs, dt= 0.01 hrs
Type III 24-hr 10-YR Rainfall=4.60"

	Area (sf)	CN	Description
	17,749	74	>75% Grass cover, Good, HSG C
	262	98	Paved parking, HSG C
	703	70	Woods, Good, HSG C
	15,507	65	Brush, Good, HSG C
*	29,751	98	Creek
	63,972	83	Weighted Average
	33,959		53.08% Pervious Area
	30,013		46.92% Impervious Area

Tc (min)	Length (feet)	Slope (ft/ft)	Velocity (ft/sec)	Capacity (cfs)	Description
5.0					**Direct Entry, Flow over pavement**

Summary for Subcatchment P2: HOTEL ROOF

Runoff = 1.76 cfs @ 12.07 hrs, Volume= 0.138 af, Depth> 4.36"

Runoff by SCS TR-20 method, UH=SCS, Weighted-CN, Time Span= 0.00-24.00 hrs, dt= 0.01 hrs
Type III 24-hr 10-YR Rainfall=4.60"

	Area (sf)	CN	Description
*	16,488	98	Roof, HSG C
	16,488		100.00% Impervious Area

Tc (min)	Length (feet)	Slope (ft/ft)	Velocity (ft/sec)	Capacity (cfs)	Description
5.0					**Direct Entry, Flow over pavement**

Summary for Subcatchment P3A: RES. ROOF

Runoff = 2.05 cfs @ 12.07 hrs, Volume= 0.160 af, Depth> 4.36"

Runoff by SCS TR-20 method, UH=SCS, Weighted-CN, Time Span= 0.00-24.00 hrs, dt= 0.01 hrs
Type III 24-hr 10-YR Rainfall=4.60"

	Area (sf)	CN	Description
*	19,191	98	Roof
	19,191		100.00% Impervious Area

Tc (min)	Length (feet)	Slope (ft/ft)	Velocity (ft/sec)	Capacity (cfs)	Description
5.0					**Direct Entry, Flow over pavement**

Summary for Subcatchment P3B: RES. ROOF

Runoff = 1.91 cfs @ 12.07 hrs, Volume= 0.149 af, Depth> 4.36"

Runoff by SCS TR-20 method, UH=SCS, Weighted-CN, Time Span= 0.00-24.00 hrs, dt= 0.01 hrs
Type III 24-hr 10-YR Rainfall=4.60"

	Area (sf)	CN	Description
*	17,910	98	Roof
	17,910		100.00% Impervious Area

Tc (min)	Length (feet)	Slope (ft/ft)	Velocity (ft/sec)	Capacity (cfs)	Description
5.0					**Direct Entry, Flow over pavement**

Summary for Subcatchment P4: FLOW TO REVERE BEACH PKWY

Runoff = 1.37 cfs @ 12.07 hrs, Volume= 0.095 af, Depth> 3.09"

Runoff by SCS TR-20 method, UH=SCS, Weighted-CN, Time Span= 0.00-24.00 hrs, dt= 0.01 hrs
Type III 24-hr 10-YR Rainfall=4.60"

Area (sf)	CN	Description
7,805	74	>75% Grass cover, Good, HSG C
8,220	98	Paved parking, HSG C
16,025	86	Weighted Average
7,805		48.71% Pervious Area
8,220		51.29% Impervious Area

Tc (min)	Length (feet)	Slope (ft/ft)	Velocity (ft/sec)	Capacity (cfs)	Description
5.0					**Direct Entry, Flow over pavement**

Summary for Pond DP#1: DP#1 Flow to Wetland/Stream

Inflow Area = 5.801 ac, 79.23% Impervious, Inflow Depth > 3.38" for 10-YR event
Inflow = 24.50 cfs @ 12.07 hrs, Volume= 1.634 af
Primary = 24.50 cfs @ 12.07 hrs, Volume= 1.634 af, Atten= 0%, Lag= 0.0 min

Routing by Stor-Ind method, Time Span= 0.00-24.00 hrs, dt= 0.01 hrs

Summary for Pond DP#2: DP#2 Flow to Revere Beach Pkwy

Inflow Area = 0.368 ac, 51.29% Impervious, Inflow Depth > 3.09" for 10-YR event
Inflow = 1.37 cfs @ 12.07 hrs, Volume= 0.095 af
Primary = 1.37 cfs @ 12.07 hrs, Volume= 0.095 af, Atten= 0%, Lag= 0.0 min

Routing by Stor-Ind method, Time Span= 0.00-24.00 hrs, dt= 0.01 hrs

Summary for Pond INF1: INFILTRATION SYSTEM 1

Inflow Area = 0.379 ac,100.00% Impervious, Inflow Depth > 4.36" for 10-YR event
Inflow = 1.76 cfs @ 12.07 hrs, Volume= 0.138 af
Outflow = 1.73 cfs @ 12.08 hrs, Volume= 0.105 af, Atten= 2%, Lag= 0.8 min
Discarded = 0.02 cfs @ 12.08 hrs, Volume= 0.027 af
Primary = 1.72 cfs @ 12.08 hrs, Volume= 0.078 af

Routing by Stor-Ind method, Time Span= 0.00-24.00 hrs, dt= 0.01 hrs
Peak Elev= 7.78' @ 12.08 hrs Surf.Area= 1,515 sf Storage= 1,542 cf

Plug-Flow detention time= 136.4 min calculated for 0.105 af (76% of inflow)
Center-of-Mass det. time= 52.7 min (800.7 - 748.1)

Volume	Invert	Avail.Storage	Storage Description
#1A	5.67'	812 cf	**14.83'W x 102.12'L x 2.33'H Field A** 3,534 cf Overall - 829 cf Embedded = 2,705 cf x 30.0% Voids
#2A	6.17'	829 cf	**ADS_StormTech SC-310** x 56 Inside #1 Effective Size= 28.9"W x 16.0"H => 2.07 sf x 7.12'L = 14.7 cf Overall Size= 34.0"W x 16.0"H x 7.56'L with 0.44' Overlap Row Length Adjustment= +0.44' x 2.07 sf x 4 rows
#3	5.67'	3 cf	**1.00'D x 4.33'H Vertical Cone/Cylinder**-Impervious
		1,644 cf	Total Available Storage

Storage Group A created with Chamber Wizard

Device	Routing	Invert	Outlet Devices
#1	Primary	5.67'	**12.0" Round Culvert** L= 12.0' CPP, projecting, no headwall, Ke= 0.900 Inlet / Outlet Invert= 5.67' / 5.47' S= 0.0167 '/' Cc= 0.900 n= 0.010 PVC, smooth interior, Flow Area= 0.79 sf
#2	Device 1	7.50'	**4.0' long x 0.5' breadth Broad-Crested Rectangular Weir** Head (feet) 0.20 0.40 0.60 0.80 1.00 Coef. (English) 2.80 2.92 3.08 3.30 3.32
#3	Discarded	5.67'	**0.270 in/hr Exfiltration over Surface area** Conductivity to Groundwater Elevation = 3.50'

Discarded OutFlow Max=0.02 cfs @ 12.08 hrs HW=7.78' (Free Discharge)
└─**3=Exfiltration** (Controls 0.02 cfs)

Primary OutFlow Max=1.71 cfs @ 12.08 hrs HW=7.78' (Free Discharge)
└─**1=Culvert** (Passes 1.71 cfs of 3.79 cfs potential flow)
└─**2=Broad-Crested Rectangular Weir** (Weir Controls 1.71 cfs @ 1.51 fps)

Summary for Pond INF2: INFILTRATION SYSTEM 2

Inflow Area =	0.441 ac,100.00% Impervious, Inflow Depth > 4.36" for 10-YR event				
Inflow =	2.05 cfs @	12.07 hrs,	Volume=	0.160 af	
Outflow =	2.01 cfs @	12.09 hrs,	Volume=	0.121 af,	Atten= 2%, Lag= 0.9 min
Discarded =	0.02 cfs @	12.09 hrs,	Volume=	0.032 af	
Primary =	1.99 cfs @	12.09 hrs,	Volume=	0.088 af	

Routing by Stor-Ind method, Time Span= 0.00-24.00 hrs, dt= 0.01 hrs
Peak Elev= 7.81' @ 12.09 hrs Surf.Area= 1,829 sf Storage= 1,903 cf

Plug-Flow detention time= 139.7 min calculated for 0.121 af (75% of inflow)
Center-of-Mass det. time= 54.0 min (802.1 - 748.1)

Volume	Invert	Avail.Storage	Storage Description
#1A	5.67'	969 cf	**24.83'W x 73.64'L x 2.33'H Field A** 4,267 cf Overall - 1,038 cf Embedded = 3,229 cf x 30.0% Voids
#2A	6.17'	1,038 cf	**ADS_StormTech SC-310** x 70 Inside #1 Effective Size= 28.9"W x 16.0"H => 2.07 sf x 7.12'L = 14.7 cf Overall Size= 34.0"W x 16.0"H x 7.56'L with 0.44' Overlap Row Length Adjustment= +0.44' x 2.07 sf x 7 rows
#3	5.67'	3 cf	**1.00'D x 3.73'H Vertical Cone/Cylinder**-Impervious
		2,010 cf	Total Available Storage

Storage Group A created with Chamber Wizard

Device	Routing	Invert	Outlet Devices
#1	Primary	5.76'	**12.0" Round Culvert** L= 13.0' CPP, projecting, no headwall, Ke= 0.900 Inlet / Outlet Invert= 5.76' / 5.50' S= 0.0200 '/' Cc= 0.900 n= 0.010 PVC, smooth interior, Flow Area= 0.79 sf
#2	Device 1	7.50'	**4.0' long x 0.5' breadth Broad-Crested Rectangular Weir**

			Head (feet) 0.20 0.40 0.60 0.80 1.00
			Coef. (English) 2.80 2.92 3.08 3.30 3.32
#3	Discarded	5.67'	**0.270 in/hr Exfiltration over Surface area**
			Conductivity to Groundwater Elevation = 3.50'

Discarded OutFlow Max=0.02 cfs @ 12.09 hrs HW=7.81' (Free Discharge)
└─**3=Exfiltration** (Controls 0.02 cfs)

Primary OutFlow Max=1.98 cfs @ 12.09 hrs HW=7.81' (Free Discharge)
└─**1=Culvert** (Passes 1.98 cfs of 3.72 cfs potential flow)
└─**2=Broad-Crested Rectangular Weir** (Weir Controls 1.98 cfs @ 1.60 fps)

Summary for Pond INF3: INFILTRATION SYSTEM 3

Inflow Area =	0.411 ac,100.00% Impervious, Inflow Depth > 4.36" for 10-YR event				
Inflow =	1.91 cfs @	12.07 hrs,	Volume=	0.149 af	
Outflow =	1.88 cfs @	12.08 hrs,	Volume=	0.113 af,	Atten= 2%, Lag= 0.9 min
Discarded =	0.02 cfs @	12.08 hrs,	Volume=	0.030 af	
Primary =	1.86 cfs @	12.08 hrs,	Volume=	0.084 af	

Routing by Stor-Ind method, Time Span= 0.00-24.00 hrs, dt= 0.01 hrs
Peak Elev= 7.80' @ 12.08 hrs Surf.Area= 1,674 sf Storage= 1,735 cf

Plug-Flow detention time= 138.6 min calculated for 0.113 af (76% of inflow)
Center-of-Mass det. time= 53.5 min (801.6 - 748.1)

Volume	Invert	Avail.Storage	Storage Description
#1A	5.67'	886 cf	**28.17'W x 59.40'L x 2.33'H Field A**
			3,904 cf Overall - 951 cf Embedded = 2,953 cf x 30.0% Voids
#2A	6.17'	951 cf	**ADS_StormTech SC-310** x 64 Inside #1
			Effective Size= 28.9"W x 16.0"H => 2.07 sf x 7.12'L = 14.7 cf
			Overall Size= 34.0"W x 16.0"H x 7.56'L with 0.44' Overlap
			Row Length Adjustment= +0.44' x 2.07 sf x 8 rows
#3	5.67'	3 cf	**1.00'D x 4.00'H Vertical Cone/Cylinder**
		1,840 cf	Total Available Storage

Storage Group A created with Chamber Wizard

Device	Routing	Invert	Outlet Devices
#1	Primary	6.25'	**12.0" Round Culvert**
			L= 83.0' CPP, projecting, no headwall, Ke= 0.900
			Inlet / Outlet Invert= 6.25' / 2.41' S= 0.0463 '/' Cc= 0.900
			n= 0.010 PVC, smooth interior, Flow Area= 0.79 sf
#2	Device 1	7.50'	**4.0' long x 0.5' breadth Broad-Crested Rectangular Weir**
			Head (feet) 0.20 0.40 0.60 0.80 1.00
			Coef. (English) 2.80 2.92 3.08 3.30 3.32
#3	Discarded	5.67'	**0.270 in/hr Exfiltration over Surface area**
			Conductivity to Groundwater Elevation = 3.50'

Discarded OutFlow Max=0.02 cfs @ 12.08 hrs HW=7.80' (Free Discharge)
└─**3=Exfiltration** (Controls 0.02 cfs)

Primary OutFlow Max=1.85 cfs @ 12.08 hrs HW=7.80' (Free Discharge)
└─**1=Culvert** (Passes 1.85 cfs of 3.06 cfs potential flow)
└─**2=Broad-Crested Rectangular Weir** (Weir Controls 1.85 cfs @ 1.56 fps)

Time span=0.00-24.00 hrs, dt=0.01 hrs, 2401 points
Runoff by SCS TR-20 method, UH=SCS, Weighted-CN
Reach routing by Stor-Ind+Trans method - Pond routing by Stor-Ind method

Subcatchment P1A: Site - Developed Area Runoff Area=135,150 sf 86.30% Impervious Runoff Depth>6.40"
Tc=5.0 min CN=95 Runoff=21.74 cfs 1.655 af

Subcatchment P1B: Site - Undisturbed Runoff Area=63,972 sf 46.92% Impervious Runoff Depth>5.02"
Tc=5.0 min CN=83 Runoff=8.80 cfs 0.615 af

Subcatchment P2: HOTEL ROOF Runoff Area=16,488 sf 100.00% Impervious Runoff Depth>6.76"
Tc=5.0 min CN=98 Runoff=2.69 cfs 0.213 af

Subcatchment P3A: RES. ROOF Runoff Area=19,191 sf 100.00% Impervious Runoff Depth>6.76"
Tc=5.0 min CN=98 Runoff=3.13 cfs 0.248 af

Subcatchment P3B: RES. ROOF Runoff Area=17,910 sf 100.00% Impervious Runoff Depth>6.76"
Tc=5.0 min CN=98 Runoff=2.93 cfs 0.232 af

Subcatchment P4: FLOW TO REVERE Runoff Area=16,025 sf 51.29% Impervious Runoff Depth>5.36"
Tc=5.0 min CN=86 Runoff=2.32 cfs 0.164 af

Pond DP#1: DP#1 Flow to Wetland/Stream Inflow=39.03 cfs 2.759 af
Primary=39.03 cfs 2.759 af

Pond DP#2: DP#2 Flow to Revere Beach Pkwy Inflow=2.32 cfs 0.164 af
Primary=2.32 cfs 0.164 af

Pond INF1: INFILTRATION SYSTEM 1 Peak Elev=7.87' Storage=1,583 cf Inflow=2.69 cfs 0.213 af
Discarded=0.02 cfs 0.029 af Primary=2.64 cfs 0.152 af Outflow=2.66 cfs 0.181 af

Pond INF2: INFILTRATION SYSTEM 2 Peak Elev=7.91' Storage=1,957 cf Inflow=3.13 cfs 0.248 af
Discarded=0.02 cfs 0.034 af Primary=3.06 cfs 0.174 af Outflow=3.09 cfs 0.208 af

Pond INF3: INFILTRATION SYSTEM 3 Peak Elev=7.89' Storage=1,782 cf Inflow=2.93 cfs 0.232 af
Discarded=0.02 cfs 0.032 af Primary=2.87 cfs 0.163 af Outflow=2.89 cfs 0.195 af

Total Runoff Area = 6.169 ac Runoff Volume = 3.127 af Average Runoff Depth = 6.08"
22.43% Pervious = 1.384 ac 77.57% Impervious = 4.785 ac

Summary for Subcatchment P1A: Site - Developed Area

Runoff = 21.74 cfs @ 12.07 hrs, Volume= 1.655 af, Depth> 6.40"

Runoff by SCS TR-20 method, UH=SCS, Weighted-CN, Time Span= 0.00-24.00 hrs, dt= 0.01 hrs
Type III 24-hr 100-YR Rainfall=7.00"

Area (sf)	CN	Description
116,630	98	Paved parking, HSG C
18,520	74	>75% Grass cover, Good, HSG C
135,150	95	Weighted Average
18,520		13.70% Pervious Area
116,630		86.30% Impervious Area

Tc (min)	Length (feet)	Slope (ft/ft)	Velocity (ft/sec)	Capacity (cfs)	Description
5.0					**Direct Entry, Flow over pavement**

Summary for Subcatchment P1B: Site - Undisturbed Area

Runoff = 8.80 cfs @ 12.07 hrs, Volume= 0.615 af, Depth> 5.02"

Runoff by SCS TR-20 method, UH=SCS, Weighted-CN, Time Span= 0.00-24.00 hrs, dt= 0.01 hrs
Type III 24-hr 100-YR Rainfall=7.00"

	Area (sf)	CN	Description
	17,749	74	>75% Grass cover, Good, HSG C
	262	98	Paved parking, HSG C
	703	70	Woods, Good, HSG C
	15,507	65	Brush, Good, HSG C
*	29,751	98	Creek
	63,972	83	Weighted Average
	33,959		53.08% Pervious Area
	30,013		46.92% Impervious Area

Tc (min)	Length (feet)	Slope (ft/ft)	Velocity (ft/sec)	Capacity (cfs)	Description
5.0					**Direct Entry, Flow over pavement**

Summary for Subcatchment P2: HOTEL ROOF

Runoff = 2.69 cfs @ 12.07 hrs, Volume= 0.213 af, Depth> 6.76"

Runoff by SCS TR-20 method, UH=SCS, Weighted-CN, Time Span= 0.00-24.00 hrs, dt= 0.01 hrs
Type III 24-hr 100-YR Rainfall=7.00"

	Area (sf)	CN	Description
*	16,488	98	Roof, HSG C
	16,488		100.00% Impervious Area

Tc (min)	Length (feet)	Slope (ft/ft)	Velocity (ft/sec)	Capacity (cfs)	Description
5.0					**Direct Entry, Flow over pavement**

Summary for Subcatchment P3A: RES. ROOF

Runoff = 3.13 cfs @ 12.07 hrs, Volume= 0.248 af, Depth> 6.76"

Runoff by SCS TR-20 method, UH=SCS, Weighted-CN, Time Span= 0.00-24.00 hrs, dt= 0.01 hrs
Type III 24-hr 100-YR Rainfall=7.00"

	Area (sf)	CN	Description
*	19,191	98	Roof
	19,191		100.00% Impervious Area

Tc (min)	Length (feet)	Slope (ft/ft)	Velocity (ft/sec)	Capacity (cfs)	Description
5.0					**Direct Entry, Flow over pavement**

Summary for Subcatchment P3B: RES. ROOF

Runoff = 2.93 cfs @ 12.07 hrs, Volume= 0.232 af, Depth> 6.76"

Runoff by SCS TR-20 method, UH=SCS, Weighted-CN, Time Span= 0.00-24.00 hrs, dt= 0.01 hrs
Type III 24-hr 100-YR Rainfall=7.00"

	Area (sf)	CN	Description
*	17,910	98	Roof
	17,910		100.00% Impervious Area

Tc (min)	Length (feet)	Slope (ft/ft)	Velocity (ft/sec)	Capacity (cfs)	Description
5.0					**Direct Entry, Flow over pavement**

Summary for Subcatchment P4: FLOW TO REVERE BEACH PKWY

Runoff = 2.32 cfs @ 12.07 hrs, Volume= 0.164 af, Depth> 5.36"

Runoff by SCS TR-20 method, UH=SCS, Weighted-CN, Time Span= 0.00-24.00 hrs, dt= 0.01 hrs
Type III 24-hr 100-YR Rainfall=7.00"

Area (sf)	CN	Description
7,805	74	>75% Grass cover, Good, HSG C
8,220	98	Paved parking, HSG C
16,025	86	Weighted Average
7,805		48.71% Pervious Area
8,220		51.29% Impervious Area

Tc (min)	Length (feet)	Slope (ft/ft)	Velocity (ft/sec)	Capacity (cfs)	Description
5.0					**Direct Entry, Flow over pavement**

Summary for Pond DP#1: DP#1 Flow to Wetland/Stream

Inflow Area = 5.801 ac, 79.23% Impervious, Inflow Depth > 5.71" for 100-YR event
Inflow = 39.03 cfs @ 12.07 hrs, Volume= 2.759 af
Primary = 39.03 cfs @ 12.07 hrs, Volume= 2.759 af, Atten= 0%, Lag= 0.0 min

Routing by Stor-Ind method, Time Span= 0.00-24.00 hrs, dt= 0.01 hrs

Summary for Pond DP#2: DP#2 Flow to Revere Beach Pkwy

Inflow Area = 0.368 ac, 51.29% Impervious, Inflow Depth > 5.36" for 100-YR event
Inflow = 2.32 cfs @ 12.07 hrs, Volume= 0.164 af
Primary = 2.32 cfs @ 12.07 hrs, Volume= 0.164 af, Atten= 0%, Lag= 0.0 min

Routing by Stor-Ind method, Time Span= 0.00-24.00 hrs, dt= 0.01 hrs

Summary for Pond INF1: INFILTRATION SYSTEM 1

Inflow Area = 0.379 ac,100.00% Impervious, Inflow Depth > 6.76" for 100-YR event
Inflow = 2.69 cfs @ 12.07 hrs, Volume= 0.213 af
Outflow = 2.66 cfs @ 12.08 hrs, Volume= 0.181 af, Atten= 1%, Lag= 0.7 min
Discarded = 0.02 cfs @ 12.08 hrs, Volume= 0.029 af
Primary = 2.64 cfs @ 12.08 hrs, Volume= 0.152 af

Routing by Stor-Ind method, Time Span= 0.00-24.00 hrs, dt= 0.01 hrs
Peak Elev= 7.87' @ 12.08 hrs Surf.Area= 1,515 sf Storage= 1,583 cf

Plug-Flow detention time= 113.6 min calculated for 0.181 af (85% of inflow)
Center-of-Mass det. time= 47.8 min (789.4 - 741.6)

Volume	Invert	Avail.Storage	Storage Description
#1A	5.67'	812 cf	**14.83'W x 102.12'L x 2.33'H Field A** 3,534 cf Overall - 829 cf Embedded = 2,705 cf x 30.0% Voids
#2A	6.17'	829 cf	**ADS_StormTech SC-310** x 56 Inside #1 Effective Size= 28.9"W x 16.0"H => 2.07 sf x 7.12'L = 14.7 cf Overall Size= 34.0"W x 16.0"H x 7.56'L with 0.44' Overlap Row Length Adjustment= +0.44' x 2.07 sf x 4 rows
#3	5.67'	3 cf	**1.00'D x 4.33'H Vertical Cone/Cylinder**-Impervious
		1,644 cf	Total Available Storage

Storage Group A created with Chamber Wizard

Device	Routing	Invert	Outlet Devices
#1	Primary	5.67'	**12.0" Round Culvert** L= 12.0' CPP, projecting, no headwall, Ke= 0.900 Inlet / Outlet Invert= 5.67' / 5.47' S= 0.0167 '/' Cc= 0.900 n= 0.010 PVC, smooth interior, Flow Area= 0.79 sf
#2	Device 1	7.50'	**4.0' long x 0.5' breadth Broad-Crested Rectangular Weir** Head (feet) 0.20 0.40 0.60 0.80 1.00 Coef. (English) 2.80 2.92 3.08 3.30 3.32
#3	Discarded	5.67'	**0.270 in/hr Exfiltration over Surface area** Conductivity to Groundwater Elevation = 3.50'

Discarded OutFlow Max=0.02 cfs @ 12.08 hrs HW=7.87' (Free Discharge)
└─**3=Exfiltration** (Controls 0.02 cfs)

Primary OutFlow Max=2.64 cfs @ 12.08 hrs HW=7.87' (Free Discharge)
└─**1=Culvert** (Passes 2.64 cfs of 3.90 cfs potential flow)
└─**2=Broad-Crested Rectangular Weir** (Weir Controls 2.64 cfs @ 1.77 fps)

Summary for Pond INF2: INFILTRATION SYSTEM 2

Inflow Area = 0.441 ac,100.00% Impervious, Inflow Depth > 6.76" for 100-YR event
Inflow = 3.13 cfs @ 12.07 hrs, Volume= 0.248 af
Outflow = 3.09 cfs @ 12.08 hrs, Volume= 0.208 af, Atten= 1%, Lag= 0.8 min
Discarded = 0.02 cfs @ 12.08 hrs, Volume= 0.034 af
Primary = 3.06 cfs @ 12.08 hrs, Volume= 0.174 af

Routing by Stor-Ind method, Time Span= 0.00-24.00 hrs, dt= 0.01 hrs
Peak Elev= 7.91' @ 12.08 hrs Surf.Area= 1,829 sf Storage= 1,957 cf

Plug-Flow detention time= 117.1 min calculated for 0.208 af (84% of inflow)
Center-of-Mass det. time= 49.0 min (790.6 - 741.6)

Volume	Invert	Avail.Storage	Storage Description
#1A	5.67'	969 cf	**24.83'W x 73.64'L x 2.33'H Field A** 4,267 cf Overall - 1,038 cf Embedded = 3,229 cf x 30.0% Voids
#2A	6.17'	1,038 cf	**ADS_StormTech SC-310** x 70 Inside #1 Effective Size= 28.9"W x 16.0"H => 2.07 sf x 7.12'L = 14.7 cf Overall Size= 34.0"W x 16.0"H x 7.56'L with 0.44' Overlap Row Length Adjustment= +0.44' x 2.07 sf x 7 rows
#3	5.67'	3 cf	**1.00'D x 3.73'H Vertical Cone/Cylinder**-Impervious
		2,010 cf	Total Available Storage

Storage Group A created with Chamber Wizard

Device	Routing	Invert	Outlet Devices
#1	Primary	5.76'	**12.0" Round Culvert** L= 13.0' CPP, projecting, no headwall, Ke= 0.900 Inlet / Outlet Invert= 5.76' / 5.50' S= 0.0200 '/' Cc= 0.900 n= 0.010 PVC, smooth interior, Flow Area= 0.79 sf
#2	Device 1	7.50'	**4.0' long x 0.5' breadth Broad-Crested Rectangular Weir**

			Head (feet) 0.20 0.40 0.60 0.80 1.00
			Coef. (English) 2.80 2.92 3.08 3.30 3.32
#3	Discarded	5.67'	**0.270 in/hr Exfiltration over Surface area**
			Conductivity to Groundwater Elevation = 3.50'

Discarded OutFlow Max=0.02 cfs @ 12.08 hrs HW=7.91' (Free Discharge)
└─**3=Exfiltration** (Controls 0.02 cfs)

Primary OutFlow Max=3.06 cfs @ 12.08 hrs HW=7.91' (Free Discharge)
└─**1=Culvert** (Passes 3.06 cfs of 3.83 cfs potential flow)
└─**2=Broad-Crested Rectangular Weir** (Weir Controls 3.06 cfs @ 1.87 fps)

Summary for Pond INF3: INFILTRATION SYSTEM 3

Inflow Area =	0.411 ac,100.00% Impervious, Inflow Depth > 6.76" for 100-YR event				
Inflow =	2.93 cfs @	12.07 hrs,	Volume=	0.232 af	
Outflow =	2.89 cfs @	12.08 hrs,	Volume=	0.195 af,	Atten= 1%, Lag= 0.7 min
Discarded =	0.02 cfs @	12.08 hrs,	Volume=	0.032 af	
Primary =	2.87 cfs @	12.08 hrs,	Volume=	0.163 af	

Routing by Stor-Ind method, Time Span= 0.00-24.00 hrs, dt= 0.01 hrs
Peak Elev= 7.89' @ 12.08 hrs Surf.Area= 1,674 sf Storage= 1,782 cf

Plug-Flow detention time= 115.9 min calculated for 0.195 af (84% of inflow)
Center-of-Mass det. time= 48.6 min (790.2 - 741.6)

Volume	Invert	Avail.Storage	Storage Description
#1A	5.67'	886 cf	**28.17'W x 59.40'L x 2.33'H Field A**
			3,904 cf Overall - 951 cf Embedded = 2,953 cf x 30.0% Voids
#2A	6.17'	951 cf	**ADS_StormTech SC-310** x 64 Inside #1
			Effective Size= 28.9"W x 16.0"H => 2.07 sf x 7.12'L = 14.7 cf
			Overall Size= 34.0"W x 16.0"H x 7.56'L with 0.44' Overlap
			Row Length Adjustment= +0.44' x 2.07 sf x 8 rows
#3	5.67'	3 cf	**1.00'D x 4.00'H Vertical Cone/Cylinder**
		1,840 cf	Total Available Storage

Storage Group A created with Chamber Wizard

Device	Routing	Invert	Outlet Devices
#1	Primary	6.25'	**12.0" Round Culvert**
			L= 83.0' CPP, projecting, no headwall, Ke= 0.900
			Inlet / Outlet Invert= 6.25' / 2.41' S= 0.0463 '/' Cc= 0.900
			n= 0.010 PVC, smooth interior, Flow Area= 0.79 sf
#2	Device 1	7.50'	**4.0' long x 0.5' breadth Broad-Crested Rectangular Weir**
			Head (feet) 0.20 0.40 0.60 0.80 1.00
			Coef. (English) 2.80 2.92 3.08 3.30 3.32
#3	Discarded	5.67'	**0.270 in/hr Exfiltration over Surface area**
			Conductivity to Groundwater Elevation = 3.50'

Discarded OutFlow Max=0.02 cfs @ 12.08 hrs HW=7.89' (Free Discharge)
└─**3=Exfiltration** (Controls 0.02 cfs)

Primary OutFlow Max=2.86 cfs @ 12.08 hrs HW=7.89' (Free Discharge)
└─**1=Culvert** (Passes 2.86 cfs of 3.19 cfs potential flow)
  └─**2=Broad-Crested Rectangular Weir** (Weir Controls 2.86 cfs @ 1.82 fps)

Appendix D:
Recharge and Water Quality Cal's

Table 1 Required Recharge Volume
205 Revere Beach Parkway
As shown in Vol 3. Chapter 1 Page 15 of the Massachusetts Stormwater Handbook
Required Recharge Volume determined by the following equation:

$R_v = F \times A_{imp}$ where:

R_v	Required Recharge Volume
F	Target Depth Factor
A_{imp}	Impervious Area

Given:
NRCS Hydrologic Soil Type - C
Target Depth Factor = 0.25 inch

Subcatchment	A_{imp} ft.^{2}	A_{imp} acre	F inch	R_v acre-ft	R_v ft.^{3}
P2	16,488	0.38	0.25	0.0079	344
P3A	19,191	0.44	0.25	0.0092	400
P3B	17,910	0.41	0.25	0.0086	373

Table 2 Simple Dynamic Method for Recharge
205 Revere Beach Parkway
As shown in Vol 3. Chapter 1 Page 19 of the Massachusetts Stormwater Handbook
Using the following equations

$A = R_v / (D+KT)$

$V = A \times D$

where

R_v	Required Recharge Volume
A	Minimum Req'd surface area of the bottom of the infiltration structure
V	Storage Volume
D	depth of the infiltration facility
K	Rawls rate for saturated hydraulic conductivity
T	allowable drawdown

Use

k=	0.27	in/hr	C -Soils
T	2	hours	

Subcatchment	R_v ft.^{3}	nD ft	A ft.^{2}	$V_{Required}$ ft.^{3}	Receiving Recharge Facility	$V_{provided}$ ft.^{3}	$V_{provided} > V_{req}$ Yes/No
P2	343.50	0.33	916.00	302.28	Subsurface Infiltration System	1,413	Yes
P3A	399.81	0.33	1,066.17	351.84	Subsurface Infiltration System	1,732	Yes
P3B	373.13	0.33	995.00	328.35	Subsurface Infiltration System	1,585	Yes

*see HydroCAD sheets for Vprovided

Table 3 Drawdown
205 Revere Beach Parkway

Using the following equations

$Time_{drawdown} = R_v/(K^* \text{ Bottom Area})$

As shown in Vol 3. Chapter 1 Page 25 of the Massachusetts Stormwater Handbook

$Time_{drawdown}$	Drawdown time for Infiltration BMP, must be < 72 hours
R_v	Required Recharge Volume
Bottom area	Bottom Area of Recharge Structure
K	Rawls rate for saturated hydraulic conductivity

k= 0.27 in/hr C -Soils

Subcatchment	R_v	Bottom Area	$Time_{drawdown}$	$Time_{drawdown}$ < 72 hours
	ft.^{3}	ft.^{2}	hours	Yes/No
P2	343.50	1514	10.08	Yes
P3A	399.81	1828	9.72	Yes
P3B	373.13	1673	9.91	Yes

Table 4 Water Quality Volume
205 Revere Beach Parkway
As shown in Vol 3. Chapter 1 Page 32 of the Massachusetts Stormwater Handbook

$V_{WQ} = (D_{WQ}/12 \text{ in/ft})*(A_{imp}*43{,}560 \text{ ft.}^2/\text{acre})$

where

V_{WQ}	Water Quality Volume
D_{WQ}	Water Quality Depth
A_{imp}	Impervious Area

D_{WQ} 1 in

Subcatchment	**A_{imp}**	**A_{imp}**	**V_{WQ}**	**$V_{provided}$***	**$V_{provided} > V_{req}$**
	ft.^{2}	**acre**	**ft.^{3}**	**ft.^{3}**	**Yes/No**
P2	16,488	0.38	1,374.00	1,413	Yes
P3A	19,191	0.44	1,599.25	1,732	Yes
P3B	17,910	0.41	1,492.50	1,585	Yes

Pond INF1: INFILTRATION SYSTEM 1 - Chamber Wizard Field A

Chamber Model = ADS_StormTech SC-310 (ADS StormTech® SC-310)
Effective Size= 28.9"W x 16.0"H => 2.07 sf x 7.12'L = 14.7 cf
Overall Size= 34.0"W x 16.0"H x 7.56'L with 0.44' Overlap
Row Length Adjustment= +0.44' x 2.07 sf x 4 rows

34.0" Wide + 6.0" Spacing = 40.0" C-C Row Spacing

14 Chambers/Row x 7.12' Long +0.44' Row Adjustment = 100.12' Row Length +12.0" End Stone x 2 = 102.12' Base Length
4 Rows x 34.0" Wide + 6.0" Spacing x 3 + 12.0" Side Stone x 2 = 14.83' Base Width
6.0" Base + 16.0" Chamber Height + 6.0" Cover = 2.33' Field Height

56 Chambers x 14.7 cf +0.44' Row Adjustment x 2.07 sf x 4 Rows = 829.2 cf Chamber Storage

3,534.4 cf Field - 829.2 cf Chambers = 2,705.2 cf Stone x 30.0% Voids = 811.6 cf Stone Storage

Chamber Storage + Stone Storage = 1,640.8 cf = 0.038 af
Overall Storage Efficiency = 46.4%
Overall System Size = 102.12' x 14.83' x 2.33'

56 Chambers
130.9 cy Field
100.2 cy Stone

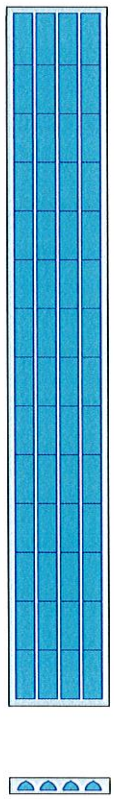

Stage-Area-Storage for Pond INF1: INFILTRATION SYSTEM 1 (continued)

Elevation (feet)	Surface (sq-ft)	Storage (cubic-feet)	Elevation (feet)	Surface (sq-ft)	Storage (cubic-feet)
6.73	1,515	831	7.26	1,515	1,285
6.74	1,515	840	7.27	1,515	1,291
6.75	1,515	850	7.28	1,515	1,297
6.76	1,515	860	7.29	1,515	1,304
6.77	1,515	870	7.30	1,515	1,310
6.78	1,515	880	7.31	1,515	1,315
6.79	1,515	890	7.32	1,515	1,321
6.80	1,515	899	7.33	1,515	1,327
6.81	1,515	909	7.34	1,515	1,332
6.82	1,515	919	7.35	1,515	1,338
6.83	1,515	928	7.36	1,515	1,343
6.84	1,515	938	7.37	1,515	1,349
6.85	1,515	947	7.38	1,515	1,354
6.86	1,515	957	7.39	1,515	1,359
6.87	1,515	966	7.40	1,515	1,365
6.88	1,515	975	7.41	1,515	1,370
6.89	1,515	985	7.42	1,515	1,375
6.90	1,515	994	7.43	1,515	1,380
6.91	1,515	1,003	7.44	1,515	1,385
6.92	1,515	1,012	7.45	1,515	1,390
6.93	1,515	1,022	7.46	1,515	1,395
6.94	1,515	1,031	7.47	1,515	1,399
6.95	1,515	1,040	7.48	1,515	1,404
6.96	1,515	1,049	7.49	1,515	1,409
6.97	1,515	1,057	7.50	1,515	1,413
6.98	1,515	1,066	7.51	1,515	1,418
6.99	1,515	1,075	7.52	1,515	1,423
7.00	1,515	1,084	7.53	1,515	1,427
7.01	1,515	1,093	7.54	1,515	1,432
7.02	1,515	1,101	7.55	1,515	1,436
7.03	1,515	1,110	7.56	1,515	1,441
7.04	1,515	1,118	7.57	1,515	1,445
7.05	1,515	1,127	7.58	1,515	1,450
7.06	1,515	1,135	7.59	1,515	1,454
7.07	1,515	1,143	7.60	1,515	1,459
7.08	1,515	1,152	7.61	1,515	1,464
7.09	1,515	1,160	7.62	1,515	1,468
7.10	1,515	1,168	7.63	1,515	1,473
7.11	1,515	1,176	7.64	1,515	1,477
7.12	1,515	1,184	7.65	1,515	1,482
7.13	1,515	1,192	7.66	1,515	1,486
7.14	1,515	1,199	7.67	1,515	1,491
7.15	1,515	1,207	7.68	1,515	1,495
7.16	1,515	1,215	7.69	1,515	1,500
7.17	1,515	1,222	7.70	1,515	1,505
7.18	1,515	1,230	7.71	1,515	1,509
7.19	1,515	1,237	7.72	1,515	1,514
7.20	1,515	1,244	7.73	1,515	1,518
7.21	1,515	1,251	7.74	1,515	1,523
7.22	1,515	1,258	7.75	1,515	1,527
7.23	1,515	1,265	7.76	1,515	1,532
7.24	1,515	1,272	7.77	1,515	1,536
7.25	1,515	1,278	7.78	1,515	1,541

- weir height

Pond INF2: INFILTRATION SYSTEM 2 - Chamber Wizard Field A

Chamber Model = ADS_StormTech SC-310 (ADS StormTech® SC-310)
Effective Size= 28.9"W x 16.0"H => 2.07 sf x 7.12'L = 14.7 cf
Overall Size= 34.0"W x 16.0"H x 7.56'L with 0.44' Overlap
Row Length Adjustment= +0.44' x 2.07 sf x 7 rows

34.0" Wide + 6.0" Spacing = 40.0" C-C Row Spacing

10 Chambers/Row x 7.12' Long +0.44' Row Adjustment = 71.64' Row Length +12.0" End Stone x 2 = 73.64' Base Length
7 Rows x 34.0" Wide + 6.0" Spacing x 6 + 12.0" Side Stone x 2 = 24.83' Base Width
6.0" Base + 16.0" Chamber Height + 6.0" Cover = 2.33' Field Height

70 Chambers x 14.7 cf +0.44' Row Adjustment x 2.07 sf x 7 Rows = 1,038.3 cf Chamber Storage

4,266.9 cf Field - 1,038.3 cf Chambers = 3,228.6 cf Stone x 30.0% Voids = 968.6 cf Stone Storage

Chamber Storage + Stone Storage = 2,006.9 cf = 0.046 af
Overall Storage Efficiency = 47.0%
Overall System Size = 73.64' x 24.83' x 2.33'

70 Chambers
158.0 cy Field
119.6 cy Stone

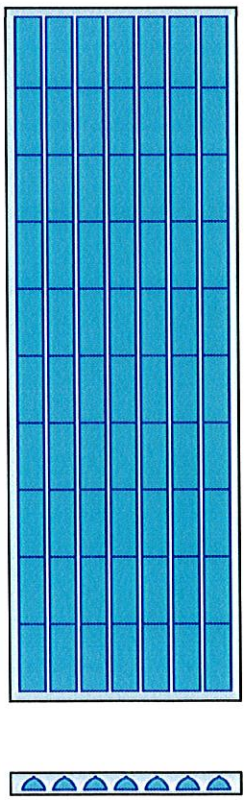

Stage-Area-Storage for Pond INF2: INFILTRATION SYSTEM 2 (continued)

Elevation (feet)	Surface (sq-ft)	Storage (cubic-feet)	Elevation (feet)	Surface (sq-ft)	Storage (cubic-feet)
6.73	1,829	1,018	7.26	1,829	1,576
6.74	1,829	1,030	7.27	1,829	1,584
6.75	1,829	1,043	7.28	1,829	1,591
6.76	1,829	1,055	7.29	1,829	1,599
6.77	1,829	1,067	7.30	1,829	1,606
6.78	1,829	1,079	7.31	1,829	1,613
6.79	1,829	1,091	7.32	1,829	1,620
6.80	1,829	1,103	7.33	1,829	1,627
6.81	1,829	1,115	7.34	1,829	1,634
6.82	1,829	1,127	7.35	1,829	1,641
6.83	1,829	1,138	7.36	1,829	1,647
6.84	1,829	1,150	7.37	1,829	1,654
6.85	1,829	1,162	7.38	1,829	1,660
6.86	1,829	1,173	7.39	1,829	1,667
6.87	1,829	1,185	7.40	1,829	1,673
6.88	1,829	1,197	7.41	1,829	1,679
6.89	1,829	1,208	7.42	1,829	1,685
6.90	1,829	1,219	7.43	1,829	1,692
6.91	1,829	1,231	7.44	1,829	1,698
6.92	1,829	1,242	7.45	1,829	1,703
6.93	1,829	1,253	7.46	1,829	1,709
6.94	1,829	1,264	7.47	1,829	1,715
6.95	1,829	1,275	7.48	1,829	1,721
6.96	1,829	1,286	7.49	1,829	1,727
6.97	1,829	1,297	7.50	1,829	1,732 - weir height
6.98	1,829	1,308	7.51	1,829	1,738
6.99	1,829	1,319	7.52	1,829	1,743
7.00	1,829	1,330	7.53	1,829	1,749
7.01	1,829	1,340	7.54	1,829	1,754
7.02	1,829	1,351	7.55	1,829	1,760
7.03	1,829	1,361	7.56	1,829	1,765
7.04	1,829	1,372	7.57	1,829	1,771
7.05	1,829	1,382	7.58	1,829	1,776
7.06	1,829	1,393	7.59	1,829	1,782
7.07	1,829	1,403	7.60	1,829	1,787
7.08	1,829	1,413	7.61	1,829	1,793
7.09	1,829	1,423	7.62	1,829	1,798
7.10	1,829	1,433	7.63	1,829	1,804
7.11	1,829	1,443	7.64	1,829	1,809
7.12	1,829	1,452	7.65	1,829	1,815
7.13	1,829	1,462	7.66	1,829	1,820
7.14	1,829	1,472	7.67	1,829	1,826
7.15	1,829	1,481	7.68	1,829	1,831
7.16	1,829	1,490	7.69	1,829	1,837
7.17	1,829	1,500	7.70	1,829	1,842
7.18	1,829	1,509	7.71	1,829	1,848
7.19	1,829	1,518	7.72	1,829	1,853
7.20	1,829	1,527	7.73	1,829	1,859
7.21	1,829	1,535	7.74	1,829	1,864
7.22	1,829	1,544	7.75	1,829	1,870
7.23	1,829	1,552	7.76	1,829	1,875
7.24	1,829	1,560	7.77	1,829	1,881
7.25	1,829	1,568	7.78	1,829	1,886

Pond INF3: INFILTRATION SYSTEM 3 - Chamber Wizard Field A

Chamber Model = ADS_StormTech SC-310 (ADS StormTech® SC-310)
Effective Size= 28.9"W x 16.0"H => 2.07 sf x 7.12'L = 14.7 cf
Overall Size= 34.0"W x 16.0"H x 7.56'L with 0.44' Overlap
Row Length Adjustment= +0.44' x 2.07 sf x 8 rows

34.0" Wide + 6.0" Spacing = 40.0" C-C Row Spacing

8 Chambers/Row x 7.12' Long +0.44' Row Adjustment = 57.40' Row Length +12.0" End Stone x 2 = 59.40' Base Length
8 Rows x 34.0" Wide + 6.0" Spacing x 7 + 12.0" Side Stone x 2 = 28.17' Base Width
6.0" Base + 16.0" Chamber Height + 6.0" Cover = 2.33' Field Height

64 Chambers x 14.7 cf +0.44' Row Adjustment x 2.07 sf x 8 Rows = 950.7 cf Chamber Storage

3,903.8 cf Field - 950.7 cf Chambers = 2,953.0 cf Stone x 30.0% Voids = 885.9 cf Stone Storage

Chamber Storage + Stone Storage = 1,836.7 cf = 0.042 af
Overall Storage Efficiency = 47.0%
Overall System Size = 59.40' x 28.17' x 2.33'

64 Chambers
144.6 cy Field
109.4 cy Stone

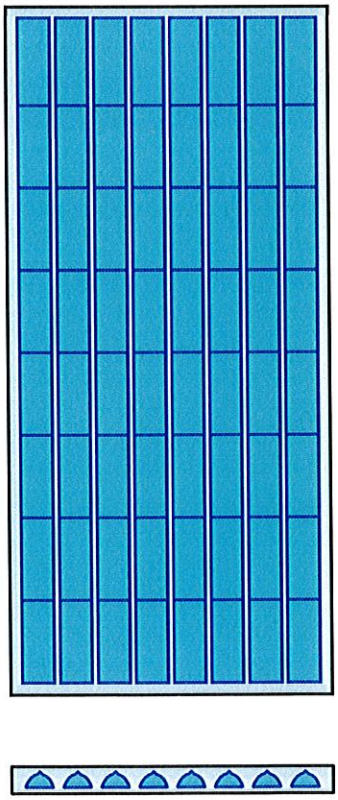

Stage-Area-Storage for Pond INF3: INFILTRATION SYSTEM 3 (continued)

Elevation (feet)	Surface (sq-ft)	Storage (cubic-feet)	Elevation (feet)	Surface (sq-ft)	Storage (cubic-feet)
6.73	1,674	932	7.26	1,674	1,443
6.74	1,674	943	7.27	1,674	1,450
6.75	1,674	954	7.28	1,674	1,457
6.76	1,674	965	7.29	1,674	1,463
6.77	1,674	976	7.30	1,674	1,470
6.78	1,674	987	7.31	1,674	1,477
6.79	1,674	998	7.32	1,674	1,483
6.80	1,674	1,009	7.33	1,674	1,489
6.81	1,674	1,020	7.34	1,674	1,496
6.82	1,674	1,031	7.35	1,674	1,502
6.83	1,674	1,042	7.36	1,674	1,508
6.84	1,674	1,053	7.37	1,674	1,514
6.85	1,674	1,063	7.38	1,674	1,520
6.86	1,674	1,074	7.39	1,674	1,526
6.87	1,674	1,085	7.40	1,674	1,531
6.88	1,674	1,095	7.41	1,674	1,537
6.89	1,674	1,106	7.42	1,674	1,543
6.90	1,674	1,116	7.43	1,674	1,548
6.91	1,674	1,126	7.44	1,674	1,554
6.92	1,674	1,137	7.45	1,674	1,559
6.93	1,674	1,147	7.46	1,674	1,565
6.94	1,674	1,157	7.47	1,674	1,570
6.95	1,674	1,167	7.48	1,674	1,575
6.96	1,674	1,177	7.49	1,674	1,580
6.97	1,674	1,187	7.50	1,674	1,585 - Weir height
6.98	1,674	1,197	7.51	1,674	1,590
6.99	1,674	1,207	7.52	1,674	1,596
7.00	1,674	1,217	7.53	1,674	1,601
7.01	1,674	1,227	7.54	1,674	1,606
7.02	1,674	1,237	7.55	1,674	1,611
7.03	1,674	1,246	7.56	1,674	1,616
7.04	1,674	1,256	7.57	1,674	1,621
7.05	1,674	1,265	7.58	1,674	1,626
7.06	1,674	1,275	7.59	1,674	1,631
7.07	1,674	1,284	7.60	1,674	1,636
7.08	1,674	1,293	7.61	1,674	1,641
7.09	1,674	1,302	7.62	1,674	1,646
7.10	1,674	1,311	7.63	1,674	1,651
7.11	1,674	1,320	7.64	1,674	1,656
7.12	1,674	1,329	7.65	1,674	1,661
7.13	1,674	1,338	7.66	1,674	1,666
7.14	1,674	1,347	7.67	1,674	1,671
7.15	1,674	1,356	7.68	1,674	1,676
7.16	1,674	1,364	7.69	1,674	1,681
7.17	1,674	1,373	7.70	1,674	1,686
7.18	1,674	1,381	7.71	1,674	1,691
7.19	1,674	1,389	7.72	1,674	1,696
7.20	1,674	1,397	7.73	1,674	1,701
7.21	1,674	1,405	7.74	1,674	1,706
7.22	1,674	1,413	7.75	1,674	1,711
7.23	1,674	1,421	7.76	1,674	1,716
7.24	1,674	1,428	7.77	1,674	1,721
7.25	1,674	1,435	7.78	1,674	1,726

Project: 205 Revere Beach Parkway
Location: Revere, MA
Prepared For: Howard Stein Hudson

CONTECH ENGINEERED SOLUTIONS

Purpose: To calculate the water quality flow rate (WQF) over a given site area. In this situation the WQF is derived from the first 1.0" of runoff.

Reference: Massachusetts Dept. of Environmental Protection Wetlands Program / United States Department of Agriculture Natural Resources Conservation Service TR-55 Manual

Given:

Structure Name	Impv. (acres)	A (miles^2)	t_c (min)	t_c (hr)	WQV (in)
WQU-1	0.69	0.0010747	6.0	0.100	1.00
WQU-2	0.55	0.0008550	6.0	0.100	1.00
WQU-3	0.92	0.0014348	6.0	0.100	1.00
WQU-4	0.53	0.0008221	6.0	0.100	1.00

Procedure:

Determine unit peak discharge using Figure 1 or 2. Figure 2 is in tabular form so is preferred. Using the tc, read the unit peak discharge (qu) from Figure 1 or Table in Figure 2. qu is expressed in the following units: cfs/mi^2/watershed inches (csm/in).

Structure Name	qu (csm/in.)
WQU-1	774.00
WQU-2	774.00
WQU-3	774.00
WQU-4	774.00

1. Compute Q Rate using the following equation:

$$Q_1 = (qu)\ (A)\ (WQV)$$

where:

Q_1 = flow fate associated with first 1.0" of runoff
qu = the unit peak discharge, in csm/in.
A = impervious surface drainage area (in square miles)
WQV = water quality volume in watershed inches (1.0" in this case)

Structure Name	Q_1 (cfs)
WQU-1	0.83
WQU-2	0.66
WQU-3	1.11
WQU-4	0.64

CONTECH®
ENGINEERED SOLUTIONS

Project Name:	205 Revere Beach Parkway		
Site Designation:	WQU-1	**Date:**	12/16/16
County or Independent City:	Revere	**Design Engineer:**	CJA
State:	MA		

Mass Loading Calculations:

Peak Design Flow (cfs)	0.83
Water Quality Flow (cfs)	0.83
Annual Rainfall (inches)	43
Total Drainage Area, A (ac)	0.69
Post Development Impervious Area, A_I (ac)	0.69
Pervious Area, A_P (ac)	0.00
Impervious Runoff Coefficient, Rv	0.95
Pervious Runoff Coefficient, Rv	0.25
% Impervious	100%
Runoff Coefficient, Rc	0.95
TSS Removal By Pretreatment	0%
Agency Required TSS % Removal	80%
Required TSS Removal Efficiency of Filter	80%
Percent Runoff Capture	100%
Mean Annual Runoff, V_t (ft^3)	102,317
Event Mean Concentration of Pollutant, EMC (mg/L)	70
Annual Mass Load, M_{total} (lbs)	446.86

Flow Based Filter Sizing:

Mass to be Captured by System (lbs)	357.48
Filter Type	Jellyfish
Structure Type	Manhole
Cartridge Length	54"
Allowable Load Per Hi-Flo Cartridge (lbs)	125
Allowable Load Per Draindown Cartridge (lbs)	63
# Hi-Flo Cartridges Required	5
# Draindown Cartridges Required	1
Recommended Model	JF6-5-1
TSS Treatment Capacity (lbs)	688.00
Maximum Water Quality Flow	0.98 cfs

CONTECH®
ENGINEERED SOLUTIONS

Project Name:	205 Revere Beach Parkway		
Site Designation:	WQU-2	**Date:**	12/16/16
County or Independent City:	Revere	**Design Engineer:**	CJA
State:	MA		

Mass Loading Calculations:

Peak Design Flow (cfs)	0.66
Water Quality Flow (cfs)	0.66
Annual Rainfall (inches)	43
Total Drainage Area, A (ac)	0.55
Post Development Impervious Area, A_I (ac)	0.55
Pervious Area, A_P (ac)	0.00
Impervious Runoff Coefficient, Rv	0.95
Pervious Runoff Coefficient, Rv	0.25
% Impervious	100%
Runoff Coefficient, Rc	0.95
TSS Removal By Pretreatment	0%
Agency Required TSS % Removal	80%
Required TSS Removal Efficiency of Filter	80%
Percent Runoff Capture	100%
Mean Annual Runoff, V_t (ft^3)	81,557
Event Mean Concentration of Pollutant, EMC (mg/L)	70
Annual Mass Load, M_{total} (lbs)	356.19

Flow Based Filter Sizing:

Mass to be Captured by System (lbs)	284.95
Filter Type	Jellyfish
Structure Type	Manhole
Cartridge Length	54"
Allowable Load Per Hi-Flo Cartridge (lbs)	125
Allowable Load Per Draindown Cartridge (lbs)	63
# Hi-Flo Cartridges Required	4
# Draindown Cartridges Required	1
Recommended Model	JF6-4-1
TSS Treatment Capacity (lbs)	563.00
Maximum Water Quality Flow	0.80 cfs

CONTECH®
ENGINEERED SOLUTIONS

Project Name:	205 Revere Beach Parkway		
Site Designation:	WQU-3	**Date:**	12/16/16
County or Independent City:	Revere	**Design Engineer:**	CJA
State:	MA		

Mass Loading Calculations:

Peak Design Flow (cfs)	1.11
Water Quality Flow (cfs)	1.11
Annual Rainfall (inches)	43
Total Drainage Area, A (ac)	0.92
Post Development Impervious Area, A_I (ac)	0.92
Pervious Area, A_P (ac)	0.00
Impervious Runoff Coefficient, Rv	0.95
Pervious Runoff Coefficient, Rv	0.25
% Impervious	100%
Runoff Coefficient, Rc	0.95
TSS Removal By Pretreatment	0%
Agency Required TSS % Removal	80%
Required TSS Removal Efficiency of Filter	80%
Percent Runoff Capture	100%
Mean Annual Runoff, V_t (ft^3)	136,423
Event Mean Concentration of Pollutant, EMC (mg/L)	70
Annual Mass Load, M_{total} (lbs)	595.81

Flow Based Filter Sizing:

Mass to be Captured by System (lbs)	476.65
Filter Type	Jellyfish
Structure Type	Manhole
Cartridge Length	54"
Allowable Load Per Hi-Flo Cartridge (lbs)	125
Allowable Load Per Draindown Cartridge (lbs)	63
# Hi-Flo Cartridges Required	6
# Draindown Cartridges Required	1
Recommended Model	JF6-6-1
TSS Treatment Capacity (lbs)	813.00
Maximum Water Quality Flow	1.16 cfs

CONTECH®
ENGINEERED SOLUTIONS

Project Name:	205 Revere Beach Parkway		
Site Designation:	WQU-4	**Date:**	12/16/16
County or Independent City:	Revere	**Design Engineer:**	CJA
State:	MA		

Mass Loading Calculations:

Peak Design Flow (cfs)	0.64
Water Quality Flow (cfs)	0.64
Annual Rainfall (inches)	43
Total Drainage Area, A (ac)	0.53
Post Development Impervious Area, A_I (ac)	0.53
Pervious Area, A_P (ac)	0.00
Impervious Runoff Coefficient, Rv	0.95
Pervious Runoff Coefficient, Rv	0.25
% Impervious	100%
Runoff Coefficient, Rc	0.95
TSS Removal By Pretreatment	0%
Agency Required TSS % Removal	80%
Required TSS Removal Efficiency of Filter	80%
Percent Runoff Capture	100%
Mean Annual Runoff, V_t (ft^3)	78,591
Event Mean Concentration of Pollutant, EMC (mg/L)	70
Annual Mass Load, M_{total} (lbs)	343.24

Flow Based Filter Sizing:

Mass to be Captured by System (lbs)	274.59
Filter Type	Jellyfish
Structure Type	Manhole
Cartridge Length	54"
Allowable Load Per Hi-Flo Cartridge (lbs)	125
Allowable Load Per Draindown Cartridge (lbs)	63
# Hi-Flo Cartridges Required	4
# Draindown Cartridges Required	1
Recommended Model	JF6-4-1
TSS Treatment Capacity (lbs)	563.00
Maximum Water Quality Flow	0.80 cfs

Appendix E:
Operation and Maintenance Plan

205 Revere Beach Parkway
Stormwater Management System

Operation and Maintenance Plan (O&M)
and
Long Term Pollution Prevention Plan (LTPPP)

December 2016

This Stormwater Management System Operation and Maintenance Plan provides for the inspection and maintenance of structural Best Management Practices (BMPs) and for measures to prevent pollution associated with the 205 Revere Beach Parkway Project in Revere, MA.

This document has been prepared in accordance with the requirements of the Stormwater Regulations included in the Massachusetts Wetlands Protection Act Regulations (310 CMR 10).

Stormwater Management System Owner:

205 Revere Beach Parkway Partners, LLC
c/o Gate Residential
265 Franklin Street, 6th Floor
Boston, MA 02110
Tel.: (617) 904-7000

The stormwater management system will be maintained properly to assure its continued performance, as follows.

1. Catch basins and area drains
   a. Inspect quarterly (January, April, July, October)
   b. Clean 4 times per year or when deposits reach ½ the depth of the sump

2. Subsurface Infiltration Systems
   a. Inspect every 6 months and after every major storm event, remove debris
   b. Remove any debris that may clog system.
   c. Remove sediment if depth reaches 3 inches.

3. Water Quality Units
   Follow manufacturer's recommendations including:
   a. Inspect twice a year (spring and fall) minimum
   b. System should be cleaned when the level of sediment has reached 75% of capacity in the isolated sump or when appreciable level of hydrocarbons and trash has accumulated.

4. Stormwater Outfalls

a. The outfall pipes located to the east of Phase One will be inspected monthly for the first three months after construction to ensure proper functioning and correct any areas that have settled or are not functioning correctly.
b. Rip-rap will be maintained, as necessary.
c. Trash and debris shall be removed at the outfall and properly disposed. Weeds and invasive plant species will be removed by hand. Leaf litter and other detritus shall be removed twice per year.

5. Semi-annually (generally May and November)
   a. Street sweeping

Practices for Long Term Pollution Prevention

Litter Pick-up
The Owner will conduct litter pick-up from the stormwater management facilities in conjunction with routine maintenance activities.

Routine Inspection and Maintenance of Stormwater BMPs
The Owner will conduct inspection and maintenance of the stormwater management practices in accordance with the guidelines discussed above.

Maintenance of Landscaped Areas
The Owner shall minimize use of fertilizers, herbicides, and pesticides for the maintenance of facilities covered by this plan.

Snow and Ice Management
Snow shall not be plowed to the back of the site where it could melt and flow untreated into Sales Creek.

Prohibition of Illicit Discharges
The DEP Stormwater Management Standards prohibit illicit discharges to the storm water management system. Illicit discharges are discharges that do not entirely consist of stormwater, except for certain specified non-stormwater discharges.

Discharges from the following activities are not considered illicit discharges:

firefighting	foundation drains
water line flushing	footing drains
landscape irrigation	individual resident car washing
uncontaminated groundwater	flows from riparian habitats and wetlands
potable water sources	dechlorinated water from swimming pools
water used to clean residential buildings without detergents	water used for street washing
	air conditioning condensation

There are no known or proposed illicit connections associated with this project.

Appendix F:
Checklist for Stormwater Report

Massachusetts Department of Environmental Protection
Bureau of Resource Protection - Wetlands Program

Checklist for Stormwater Report

A. Introduction

Important: When filling out forms on the computer, use only the tab key to move your cursor - do not use the return key.

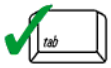

A Stormwater Report must be submitted with the Notice of Intent permit application to document compliance with the Stormwater Management Standards. The following checklist is NOT a substitute for the Stormwater Report (which should provide more substantive and detailed information) but is offered here as a tool to help the applicant organize their Stormwater Management documentation for their Report and for the reviewer to assess this information in a consistent format. As noted in the Checklist, the Stormwater Report must contain the engineering computations and supporting information set forth in Volume 3 of the Massachusetts Stormwater Handbook. The Stormwater Report must be prepared and certified by a Registered Professional Engineer (RPE) licensed in the Commonwealth.

The Stormwater Report must include:

- The Stormwater Checklist completed and stamped by a Registered Professional Engineer (see page 2) that certifies that the Stormwater Report contains all required submittals.[1] This Checklist is to be used as the cover for the completed Stormwater Report.
- Applicant/Project Name
- Project Address
- Name of Firm and Registered Professional Engineer that prepared the Report
- Long-Term Pollution Prevention Plan required by Standards 4-6
- Construction Period Pollution Prevention and Erosion and Sedimentation Control Plan required by Standard 8[2]
- Operation and Maintenance Plan required by Standard 9

In addition to all plans and supporting information, the Stormwater Report must include a brief narrative describing stormwater management practices, including environmentally sensitive site design and LID techniques, along with a diagram depicting runoff through the proposed BMP treatment train. Plans are required to show existing and proposed conditions, identify all wetland resource areas, NRCS soil types, critical areas, Land Uses with Higher Potential Pollutant Loads (LUHPPL), and any areas on the site where infiltration rate is greater than 2.4 inches per hour. The Plans shall identify the drainage areas for both existing and proposed conditions at a scale that enables verification of supporting calculations.

As noted in the Checklist, the Stormwater Management Report shall document compliance with each of the Stormwater Management Standards as provided in the Massachusetts Stormwater Handbook. The soils evaluation and calculations shall be done using the methodologies set forth in Volume 3 of the Massachusetts Stormwater Handbook.

To ensure that the Stormwater Report is complete, applicants are required to fill in the Stormwater Report Checklist by checking the box to indicate that the specified information has been included in the Stormwater Report. If any of the information specified in the checklist has not been submitted, the applicant must provide an explanation. The completed Stormwater Report Checklist and Certification must be submitted with the Stormwater Report.

[1] The Stormwater Report may also include the Illicit Discharge Compliance Statement required by Standard 10. If not included in the Stormwater Report, the Illicit Discharge Compliance Statement must be submitted prior to the discharge of stormwater runoff to the post-construction best management practices.

[2] For some complex projects, it may not be possible to include the Construction Period Erosion and Sedimentation Control Plan in the Stormwater Report. In that event, the issuing authority has the discretion to issue an Order of Conditions that approves the project and includes a condition requiring the proponent to submit the Construction Period Erosion and Sedimentation Control Plan before commencing any land disturbance activity on the site.

Massachusetts Department of Environmental Protection
Bureau of Resource Protection - Wetlands Program

Checklist for Stormwater Report

B. Stormwater Checklist and Certification

The following checklist is intended to serve as a guide for applicants as to the elements that ordinarily need to be addressed in a complete Stormwater Report. The checklist is also intended to provide conservation commissions and other reviewing authorities with a summary of the components necessary for a comprehensive Stormwater Report that addresses the ten Stormwater Standards.

Note: Because stormwater requirements vary from project to project, it is possible that a complete Stormwater Report may not include information on some of the subjects specified in the Checklist. If it is determined that a specific item does not apply to the project under review, please note that the item is not applicable (N.A.) and provide the reasons for that determination.

A complete checklist must include the Certification set forth below signed by the Registered Professional Engineer who prepared the Stormwater Report.

Registered Professional Engineer's Certification

I have reviewed the Stormwater Report, including the soil evaluation, computations, Long-term Pollution Prevention Plan, the Construction Period Erosion and Sedimentation Control Plan (if included), the Long-term Post-Construction Operation and Maintenance Plan, the Illicit Discharge Compliance Statement (if included) and the plans showing the stormwater management system, and have determined that they have been prepared in accordance with the requirements of the Stormwater Management Standards as further elaborated by the Massachusetts Stormwater Handbook. I have also determined that the information presented in the Stormwater Checklist is accurate and that the information presented in the Stormwater Report accurately reflects conditions at the site as of the date of this permit application.

Registered Professional Engineer Block and Signature

COMMONWEALTH OF MASSACHUSETTS
RICHARD E. LATINI
CIVIL
No. 41033
REGISTERED PROFESSIONAL ENGINEER

12/21/16

Signature and Date

Checklist

Project Type: Is the application for new development, redevelopment, or a mix of new and redevelopment?

☐ New development

☒ Redevelopment

☐ Mix of New Development and Redevelopment

Checklist for Stormwater Report

Checklist (continued)

LID Measures: Stormwater Standards require LID measures to be considered. Document what environmentally sensitive design and LID Techniques were considered during the planning and design of the project:

- ☐ No disturbance to any Wetland Resource Areas
- ☐ Site Design Practices (e.g. clustered development, reduced frontage setbacks)
- ☒ Reduced Impervious Area (Redevelopment Only)
- ☐ Minimizing disturbance to existing trees and shrubs
- ☐ LID Site Design Credit Requested:
  - ☐ Credit 1
  - ☐ Credit 2
  - ☐ Credit 3
- ☐ Use of "country drainage" versus curb and gutter conveyance and pipe
- ☐ Bioretention Cells (includes Rain Gardens)
- ☐ Constructed Stormwater Wetlands (includes Gravel Wetlands designs)
- ☐ Treebox Filter
- ☐ Water Quality Swale
- ☐ Grass Channel
- ☐ Green Roof
- ☒ Other (describe): Subsurface Infiltration Systems

Standard 1: No New Untreated Discharges

- ☒ No new untreated discharges
- ☒ Outlets have been designed so there is no erosion or scour to wetlands and waters of the Commonwealth
- ☒ Supporting calculations specified in Volume 3 of the Massachusetts Stormwater Handbook included.

Checklist for Stormwater Report

Checklist (continued)

Standard 2: Peak Rate Attenuation

☐ Standard 2 waiver requested because the project is located in land subject to coastal storm flowage and stormwater discharge is to a wetland subject to coastal flooding.

☐ Evaluation provided to determine whether off-site flooding increases during the 100-year 24-hour storm.

☒ Calculations provided to show that post-development peak discharge rates do not exceed pre-development rates for the 2-year and 10-year 24-hour storms. If evaluation shows that off-site flooding increases during the 100-year 24-hour storm, calculations are also provided to show that post-development peak discharge rates do not exceed pre-development rates for the 100-year 24-hour storm.

Standard 3: Recharge

☒ Soil Analysis provided.

☒ Required Recharge Volume calculation provided.

☐ Required Recharge volume reduced through use of the LID site Design Credits.

☒ Sizing the infiltration, BMPs is based on the following method: Check the method used.

☐ Static ☒ Simple Dynamic ☐ Dynamic Field[1]

☐ Runoff from all impervious areas at the site discharging to the infiltration BMP.

☐ Runoff from all impervious areas at the site is *not* discharging to the infiltration BMP and calculations are provided showing that the drainage area contributing runoff to the infiltration BMPs is sufficient to generate the required recharge volume.

☒ Recharge BMPs have been sized to infiltrate the Required Recharge Volume.

☐ Recharge BMPs have been sized to infiltrate the Required Recharge Volume *only* to the maximum extent practicable for the following reason:

- ☐ Site is comprised solely of C and D soils and/or bedrock at the land surface
- ☐ M.G.L. c. 21E sites pursuant to 310 CMR 40.0000
- ☐ Solid Waste Landfill pursuant to 310 CMR 19.000
- ☐ Project is otherwise subject to Stormwater Management Standards only to the maximum extent practicable.

☒ Calculations showing that the infiltration BMPs will drain in 72 hours are provided.

☐ Property includes a M.G.L. c. 21E site or a solid waste landfill and a mounding analysis is included.

[1] 80% TSS removal is required prior to discharge to infiltration BMP if Dynamic Field method is used.

Checklist for Stormwater Report

Checklist (continued)

Standard 3: Recharge (continued)

☐ The infiltration BMP is used to attenuate peak flows during storms greater than or equal to the 10-year 24-hour storm and separation to seasonal high groundwater is less than 4 feet and a mounding analysis is provided.

☒ Documentation is provided showing that infiltration BMPs do not adversely impact nearby wetland resource areas.

Standard 4: Water Quality

The Long-Term Pollution Prevention Plan typically includes the following:

- Good housekeeping practices;
- Provisions for storing materials and waste products inside or under cover;
- Vehicle washing controls;
- Requirements for routine inspections and maintenance of stormwater BMPs;
- Spill prevention and response plans;
- Provisions for maintenance of lawns, gardens, and other landscaped areas;
- Requirements for storage and use of fertilizers, herbicides, and pesticides;
- Pet waste management provisions;
- Provisions for operation and management of septic systems;
- Provisions for solid waste management;
- Snow disposal and plowing plans relative to Wetland Resource Areas;
- Winter Road Salt and/or Sand Use and Storage restrictions;
- Street sweeping schedules;
- Provisions for prevention of illicit discharges to the stormwater management system;
- Documentation that Stormwater BMPs are designed to provide for shutdown and containment in the event of a spill or discharges to or near critical areas or from LUHPPL;
- Training for staff or personnel involved with implementing Long-Term Pollution Prevention Plan;
- List of Emergency contacts for implementing Long-Term Pollution Prevention Plan.

☒ A Long-Term Pollution Prevention Plan is attached to Stormwater Report and is included as an attachment to the Wetlands Notice of Intent.

☒ Treatment BMPs subject to the 44% TSS removal pretreatment requirement and the one inch rule for calculating the water quality volume are included, and discharge:

- ☐ is within the Zone II or Interim Wellhead Protection Area
- ☐ is near or to other critical areas
- ☐ is within soils with a rapid infiltration rate (greater than 2.4 inches per hour)
- ☒ involves runoff from land uses with higher potential pollutant loads.

☐ The Required Water Quality Volume is reduced through use of the LID site Design Credits.

☒ Calculations documenting that the treatment train meets the 80% TSS removal requirement and, if applicable, the 44% TSS removal pretreatment requirement, are provided.

Checklist for Stormwater Report

Checklist (continued)

Standard 4: Water Quality (continued)

☒ The BMP is sized (and calculations provided) based on:

- ☒ The ½" or 1" Water Quality Volume or
- ☒ The equivalent flow rate associated with the Water Quality Volume and documentation is provided showing that the BMP treats the required water quality volume.

☒ The applicant proposes to use proprietary BMPs, and documentation supporting use of proprietary BMP and proposed TSS removal rate is provided. This documentation may be in the form of the propriety BMP checklist found in Volume 2, Chapter 4 of the Massachusetts Stormwater Handbook and submitting copies of the TARP Report, STEP Report, and/or other third party studies verifying performance of the proprietary BMPs.

☐ A TMDL exists that indicates a need to reduce pollutants other than TSS and documentation showing that the BMPs selected are consistent with the TMDL is provided.

Standard 5: Land Uses With Higher Potential Pollutant Loads (LUHPPLs)

☐ The NPDES Multi-Sector General Permit covers the land use and the Stormwater Pollution Prevention Plan (SWPPP) has been included with the Stormwater Report.

☐ The NPDES Multi-Sector General Permit covers the land use and the SWPPP will be submitted ***prior to*** the discharge of stormwater to the post-construction stormwater BMPs.

☐ The NPDES Multi-Sector General Permit does ***not*** cover the land use.

☐ LUHPPLs are located at the site and industry specific source control and pollution prevention measures have been proposed to reduce or eliminate the exposure of LUHPPLs to rain, snow, snow melt and runoff, and been included in the long term Pollution Prevention Plan.

☐ All exposure has been eliminated.

☐ All exposure has ***not*** been eliminated and all BMPs selected are on MassDEP LUHPPL list.

☒ The LUHPPL has the potential to generate runoff with moderate to higher concentrations of oil and grease (e.g. all parking lots with >1000 vehicle trips per day) and the treatment train includes an oil grit separator, a filtering bioretention area, a sand filter or equivalent.

Standard 6: Critical Areas

☒ The discharge is near or to a critical area and the treatment train includes only BMPs that MassDEP has approved for stormwater discharges to or near that particular class of critical area.

☒ Critical areas and BMPs are identified in the Stormwater Report.

Checklist for Stormwater Report

Checklist (continued)

Standard 7: Redevelopments and Other Projects Subject to the Standards only to the maximum extent practicable

☒ The project is subject to the Stormwater Management Standards only to the maximum Extent Practicable as a:

- ☐ Limited Project
- ☐ Small Residential Projects: 5-9 single family houses or 5-9 units in a multi-family development provided there is no discharge that may potentially affect a critical area.
- ☐ Small Residential Projects: 2-4 single family houses or 2-4 units in a multi-family development with a discharge to a critical area
- ☐ Marina and/or boatyard provided the hull painting, service and maintenance areas are protected from exposure to rain, snow, snow melt and runoff
- ☐ Bike Path and/or Foot Path
- ☒ Redevelopment Project
- ☐ Redevelopment portion of mix of new and redevelopment.

☐ Certain standards are not fully met (Standard No. 1, 8, 9, and 10 must always be fully met) and an explanation of why these standards are not met is contained in the Stormwater Report.

☒ The project involves redevelopment and a description of all measures that have been taken to improve existing conditions is provided in the Stormwater Report. The redevelopment checklist found in Volume 2 Chapter 3 of the Massachusetts Stormwater Handbook may be used to document that the proposed stormwater management system (a) complies with Standards 2, 3 and the pretreatment and structural BMP requirements of Standards 4-6 to the maximum extent practicable and (b) improves existing conditions.

Standard 8: Construction Period Pollution Prevention and Erosion and Sedimentation Control

A Construction Period Pollution Prevention and Erosion and Sedimentation Control Plan must include the following information:

- Narrative;
- Construction Period Operation and Maintenance Plan;
- Names of Persons or Entity Responsible for Plan Compliance;
- Construction Period Pollution Prevention Measures;
- Erosion and Sedimentation Control Plan Drawings;
- Detail drawings and specifications for erosion control BMPs, including sizing calculations;
- Vegetation Planning;
- Site Development Plan;
- Construction Sequencing Plan;
- Sequencing of Erosion and Sedimentation Controls;
- Operation and Maintenance of Erosion and Sedimentation Controls;
- Inspection Schedule;
- Maintenance Schedule;
- Inspection and Maintenance Log Form.

☐ A Construction Period Pollution Prevention and Erosion and Sedimentation Control Plan containing the information set forth above has been included in the Stormwater Report.

Checklist for Stormwater Report

Checklist (continued)

Standard 8: Construction Period Pollution Prevention and Erosion and Sedimentation Control (continued)

☐ The project is highly complex and information is included in the Stormwater Report that explains why it is not possible to submit the Construction Period Pollution Prevention and Erosion and Sedimentation Control Plan with the application. A Construction Period Pollution Prevention and Erosion and Sedimentation Control has ***not*** been included in the Stormwater Report but will be submitted ***before*** land disturbance begins.

☐ The project is ***not*** covered by a NPDES Construction General Permit.

☐ The project is covered by a NPDES Construction General Permit and a copy of the SWPPP is in the Stormwater Report.

☒ The project is covered by a NPDES Construction General Permit but no SWPPP been submitted. The SWPPP will be submitted BEFORE land disturbance begins.

Standard 9: Operation and Maintenance Plan

☒ The Post Construction Operation and Maintenance Plan is included in the Stormwater Report and includes the following information:

- ☒ Name of the stormwater management system owners;
- ☒ Party responsible for operation and maintenance;
- ☒ Schedule for implementation of routine and non-routine maintenance tasks;
- ☒ Plan showing the location of all stormwater BMPs maintenance access areas;
- ☐ Description and delineation of public safety features;
- ☐ Estimated operation and maintenance budget; and
- ☐ Operation and Maintenance Log Form.

☐ The responsible party is ***not*** the owner of the parcel where the BMP is located and the Stormwater Report includes the following submissions:

- ☐ A copy of the legal instrument (deed, homeowner's association, utility trust or other legal entity) that establishes the terms of and legal responsibility for the operation and maintenance of the project site stormwater BMPs;
- ☐ A plan and easement deed that allows site access for the legal entity to operate and maintain BMP functions.

Standard 10: Prohibition of Illicit Discharges

☒ The Long-Term Pollution Prevention Plan includes measures to prevent illicit discharges;

☒ An Illicit Discharge Compliance Statement is attached;

☐ NO Illicit Discharge Compliance Statement is attached but will be submitted ***prior to*** the discharge of any stormwater to post-construction BMPs.

Appendix G:
Illicit Discharge Compliance Statement

Illicit Discharge Compliance Statement

To the best of my knowledge, belief and information the stormwater management system servicing 205 Revere Beach Parkway will not receive illicit discharges, including wastewater discharges or stormwater contaminated by contact with process wastes, raw materials, toxic pollutants, or hazardous substances.

The stormwater management and conveyance systems are shown on the plans entitled "205 Revere Beach Parkway – Grading & Utilities Plans" prepared by Howard Stein Hudson and include with the Notice of Intent submittal.

Applicant: TransDel Corp./Gate Residential

Signature:_____

Address: 265 Franklin Street, 6th Floor
Boston, MA 02110

Tel.: (617) 904-7000

HOWARD STEIN HUDSON

11 Beacon Street, Suite 1010
Boston, Massachusetts 02108
617.482.7080

www.hshassoc.com